JOHN DEERE
WORLDWIDE COMMERCIAL & CONSUMER EQUIPMENT DIVISION

Lightweight Fairway Mower
7500, 7700, 8500, 8700, 8800 (SN 020001-)
7500E-Cut Hybrid and 8500E-Cut Hybrid (SN 010001-)

TM107919 DECEMBER 2008

TECHNICAL MANUAL

JOHN DEERE

North American Version
Litho In U.s.a.

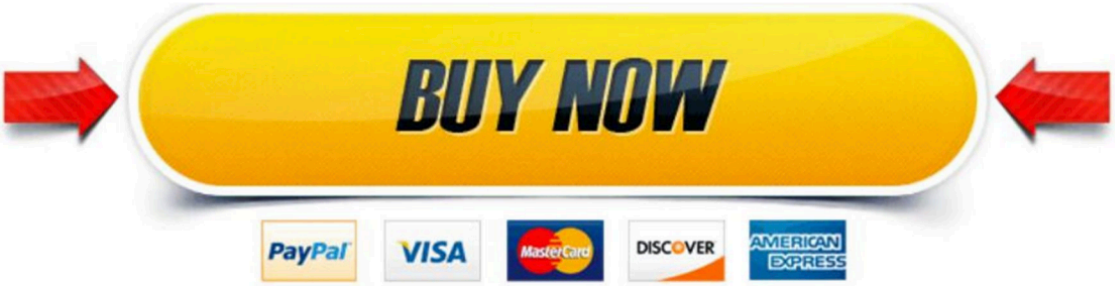
BUY NOW
PayPal
VISA
MasterCard
DISCOVER
AMERICAN EXPRESS

INTRODUCTION

Manual Description

This technical manual is written for an experienced technician and contains sections that are specifically for this product. It is a part of a total product support program.

The manual is organized so that all the information on a particular system is kept together. The order of grouping is as follows:

- Table of Contents
- Specifications and Information
- Identification Numbers
- Tools and Materials
- Component Location
- Schematics and Harnesses
- Theory of Operation
- Operation and Diagnostics
- Diagnostics
- Tests and Adjustments
- Repair
- Other

Note: Depending on the particular section or system being covered, not all of the above groups may be used.

The bleed tabs for the pages of each section will align with the sections listed on this page. Page numbering is consecutive from the beginning of the Safety section through the last section.

We appreciate your input on this manual. If you find any errors or want to comment on the layout of the manual please contact us.

Safety

Specifications and Information

Engine

Electrical

Power Train

Hydraulics

Steering

Brakes

Attachments

All information, illustrations and specifications in this manual are based on the latest information at the time of publication. The right is reserved to make changes at any time without notice.

COPYRIGHT© 2008
Deere & Co.
John Deere Worldwide Commercial and Consumer Equipment Division
All rights reserved
Previous Editions
COPYRIGHT©

INTRODUCTION

SAFETY

Recognize Safety Information

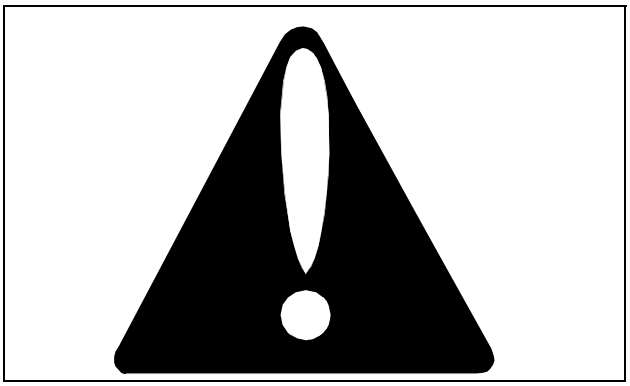

MIF

This is the safety-alert symbol. When you see this symbol on your machine or in this manual, be alert to the potential for personal injury.

Follow recommended precautions and safe servicing practices.

Understand Signal Words

A signal word - DANGER, WARNING, or CAUTION - is used with the safety-alert symbol. DANGER identifies the most serious hazards.

DANGER or WARNING safety signs are located near specific hazards. General precautions are listed on CAUTION safety signs. CAUTION also calls attention to safety messages in this manual.

Replace Safety Signs

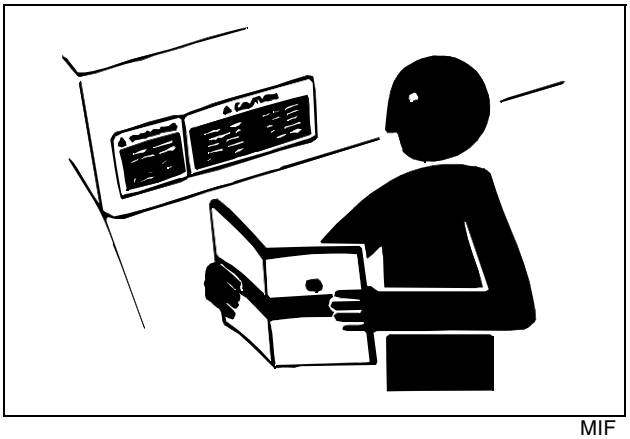

MIF

Replace missing or damaged safety signs. See the machine operator's manual for correct safety sign placement.

Handle Fluids Safely - Avoid Fires

Be Prepared For Emergencies

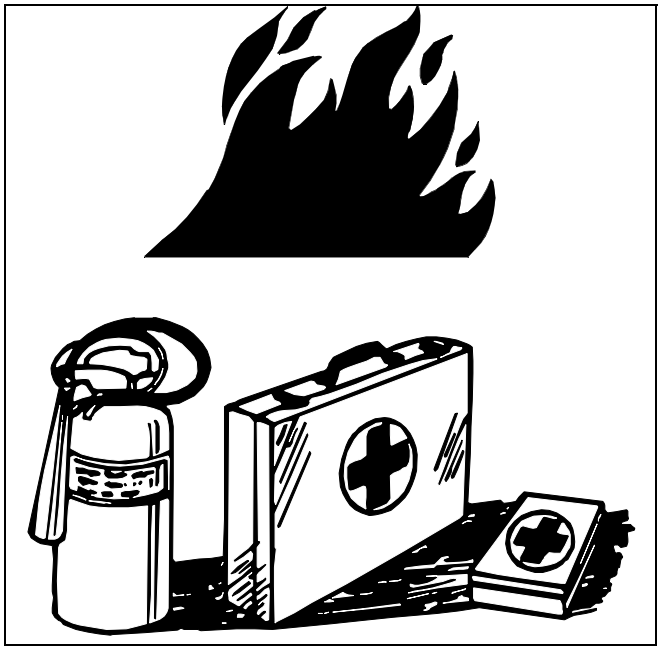

MIF

When you work around fuel, do not smoke or work near heaters or other fire hazards.

Store flammable fluids away from fire hazards. Do not incinerate or puncture pressurized containers.

Make sure machine is clean of trash, grease, and debris.

Do not store oily rags; they can ignite and burn spontaneously.

Be prepared if a fire starts.

Keep a first aid kit and fire extinguisher handy.

Keep emergency numbers for doctors, ambulance service, hospital, and fire department near your telephone.

Use Care in Handling and Servicing Batteries

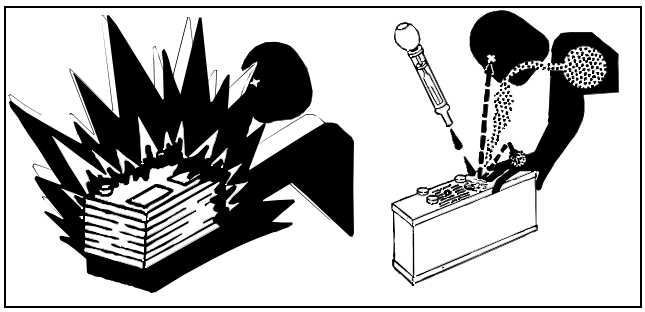

MIF

Prevent Battery Explosions

- Keep sparks, lighted matches, and open flame away from the top of battery. Battery gas can explode.
- Never check battery charge by placing a metal object across the posts. Use a voltmeter or hydrometer.
- Do not charge a frozen battery; it may explode. Warm battery to 16°C (60°F).

Prevent Acid Burns

- Sulfuric acid in battery electrolyte is poisonous. It is strong enough to burn skin, eat holes in clothing, and cause blindness if splashed into eyes.

Avoid acid burns by:

1. Filling batteries in a well-ventilated area.
2. Wearing eye protection and rubber gloves.
3. Avoiding breathing fumes when electrolyte is added.
4. Avoiding spilling or dripping electrolyte.
5. Using proper jump start procedure.

If you spill acid on yourself:

6. Flush your skin with water.
7. Apply baking soda or lime to help neutralize the acid.
8. Flush your eyes with water for 10-15 minutes.
9. Get medical attention immediately.

If acid is swallowed:

10. Drink large amounts of water or milk.
11. Then drink milk of magnesia, beaten eggs, or vegetable oil.
12. Get medical attention immediately.

Use Care Around High-Pressure Fluid Lines

Avoid High-Pressure Fluids

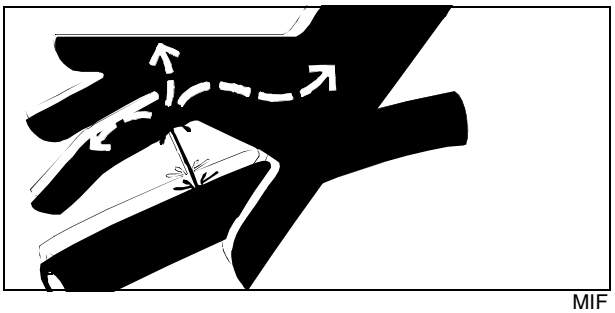

MIF

Escaping fluid under pressure can penetrate the skin causing serious injury.

Avoid injury from escaping fluid under pressure by stopping the engine and relieving pressure in the system before disconnecting or connecting hydraulic or other lines. Tighten all connections before applying pressure.

Search for leaks with a piece of cardboard. Protect hands and body from high-pressure fluids.

If an accident occurs, see a doctor immediately. Any fluid injected into the skin must be surgically removed within a few hours or gangrene may result. Doctors unfamiliar with this type of injury should reference a knowledgeable medical source. Such information is available from Deere & Company Medical Department in Moline, Illinois, U.S.A.

Avoid Heating Near Pressurized Fluid Lines

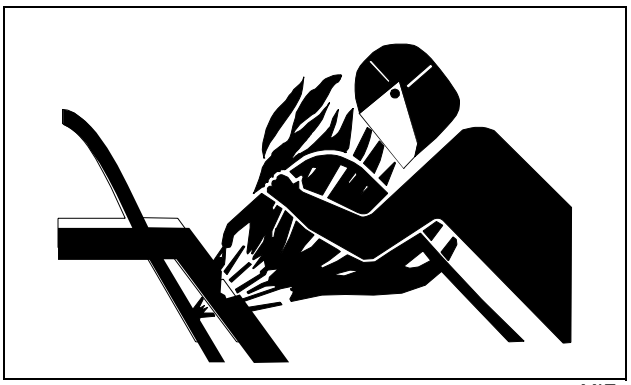

MIF

Flammable spray can be generated by heating near pressurized fluid lines, resulting in severe burns to yourself and bystanders. Do not heat by welding, soldering, or using a torch near pressurized fluid lines or other flammable materials. Pressurized lines can be accidentally cut when heat goes beyond the immediate flame area.

Use Safe Service Procedures

Wear Protective Clothing

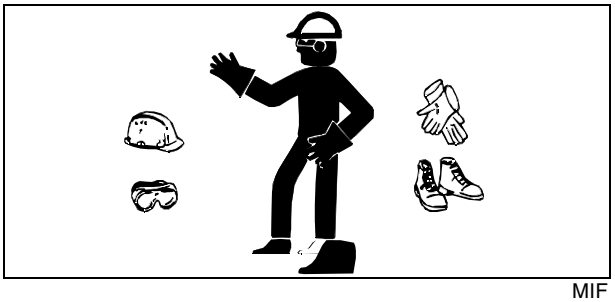

MIF

Wear close-fitting clothing and safety equipment appropriate to the job.

Prolonged exposure to loud noise can cause impairment or loss of hearing. Wear a suitable hearing protective device such as earmuffs or earplugs to protect against objectionable or uncomfortable loud noises.

Operating equipment safely requires the full attention of the operator. Do not wear radio or music headphones while operating machine.

Service Machines Safely

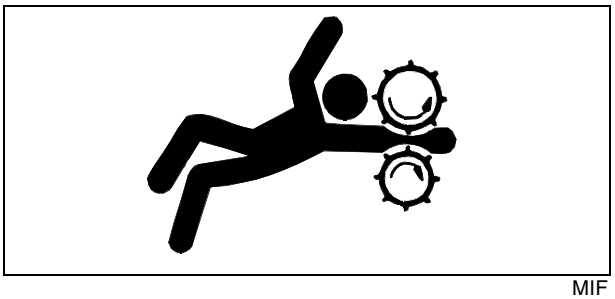

MIF

Tie long hair behind your head. Do not wear a necktie, scarf, loose clothing, or necklace when you work near machine tools or moving parts. If these items were to get caught, severe injury could result.

Remove rings and other jewelry to prevent electrical shorts and entanglement in moving parts.

Use Proper Tools

Use tools appropriate to the work. Makeshift tools and procedures can create safety hazards. Use power tools only to loosen threaded parts and fasteners. For loosening and tightening hardware, use the correct size tools. **DO NOT** use U.S. measurement tools on metric fasteners. Avoid bodily injury caused by slipping wrenches. Use only service parts meeting John Deere specifications.

Park Machine Safely

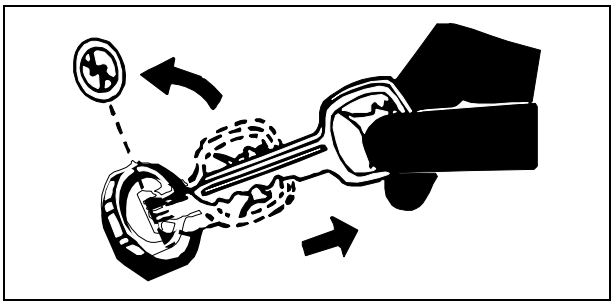

MIF

Before working on the machine:

1. Lower all equipment to the ground.
2. Stop the engine and remove the key.
3. Disconnect the battery ground strap.
4. Hang a “DO NOT OPERATE” tag in operator station.

Support Machine Properly and Use Proper Lifting Equipment

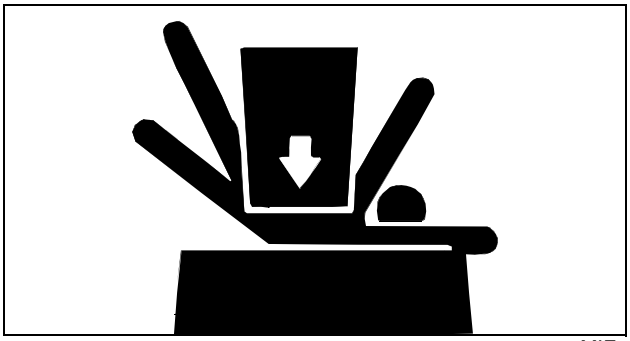

MIF

If you must work on a lifted machine or attachment, securely support the machine or attachment.

Do not support the machine on cinder blocks, hollow tiles, or props that may crumble under continuous load. Do not work under a machine that is supported solely by a jack. Follow recommended procedures in this manual.

Lifting heavy components incorrectly can cause severe injury or machine damage. Follow recommended procedure for removal and installation of components in the manual.

Work in Clean Area

Before starting a job:

1. Clean work area and machine.
2. Make sure you have all necessary tools to do your job.
3. Have the right parts on hand.
4. Read all instructions thoroughly; do not attempt shortcuts.

Using High-Pressure Washers

Directing pressurized water at electronic/electrical components or connectors, bearings, hydraulic seals, fuel injection pumps or other sensitive parts and components may cause product malfunctions. Reduce pressure and spray at a 45 to 90 degree angle.

Illuminate Work Area Safely

Illuminate your work area adequately but safely. Use a portable safety light for working inside or under the machine. Make sure the bulb is enclosed by a wire cage. The hot filament of an accidentally broken bulb can ignite spilled fuel or oil.

Work in Ventilated Area

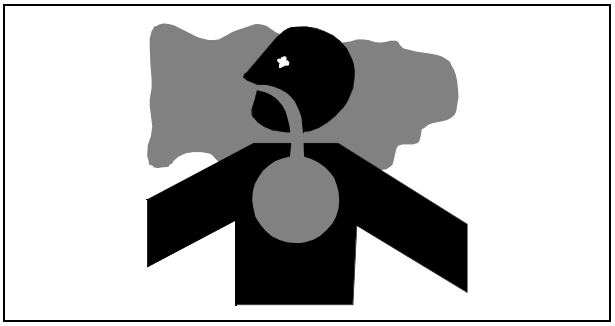

MIF

Engine exhaust fumes can cause sickness or death. If it is necessary to run an engine in an enclosed area, remove the exhaust fumes from the area with an exhaust pipe extension.

If you do not have an exhaust pipe extension, open the doors and get outside air into the area.

WARNING: California Proposition 65 Warning

Diesel engine exhaust and some of its constituents are known to the State of California to cause cancer, birth defects, and other reproductive harm.

Gasoline engine exhaust from this product contains chemicals known to the State of California to cause cancer, birth defects, or other reproductive harm.

Remove Paint Before Welding or Heating

Avoid potentially toxic fumes and dust. Hazardous fumes can be generated when paint is heated by welding, soldering, or using a torch. Do all work outside or in a well ventilated area. Dispose of paint and solvent properly. Remove paint before welding or heating: If you sand or grind paint, avoid breathing the dust. Wear an approved respirator. If you use solvent or paint stripper, remove stripper with soap and water before welding. Remove solvent or paint stripper containers and other flammable material from area. Allow fumes to disperse at least 15 minutes before welding or heating.

Avoid Harmful Asbestos Dust

Avoid breathing dust that may be generated when handling components containing asbestos fibers. Inhaled asbestos fibers may cause lung cancer.

Components in products that may contain asbestos fibers are brake pads, brake band and lining assemblies, clutch plates, and some gaskets. The asbestos used in these components is usually found in a resin or sealed in some way. Normal handling is not hazardous as long as airborne dust containing asbestos is not generated.

Avoid creating dust. Never use compressed air for cleaning. Avoid brushing or grinding material containing asbestos. When servicing, wear an approved respirator. A special vacuum cleaner is recommended to clean asbestos. If not available, apply a mist of oil or water on the material containing asbestos. Keep bystanders away from the area.

Service Tires Safely



MIF

Explosive separation of a tire and rim parts can cause serious injury or death.

Do not attempt to mount a tire unless you have the proper equipment and experience to perform the job. Always maintain the correct tire pressure. Do not inflate the tires above the recommended pressure. Never weld or heat a wheel and tire assembly. The heat can cause an increase in air pressure resulting in a tire explosion. Welding can structurally weaken or deform the wheel.

When inflating tires, use a clip-on chuck and extension hose long enough to allow you to stand to one side and NOT in front of or over the tire assembly. Use a safety cage if available.

Check wheels for low pressure, cuts, bubbles, damaged rims or missing lug bolts and nuts.

Avoid Injury from Rotating Blades and Drive Shafts

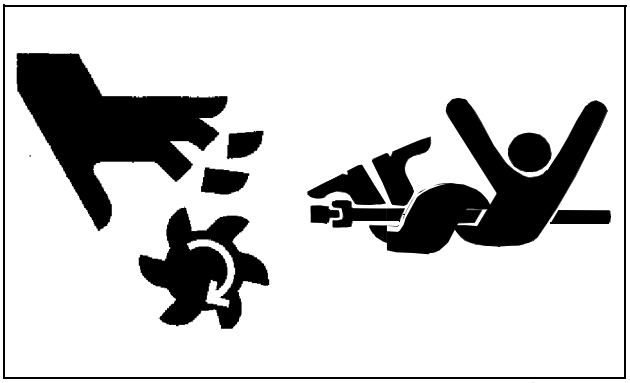

TS283 MIF

Keep hands and feet away while machine is running. Shut off power to service, lubricate or remove mower blades or drive shafts.

Service Cooling System Safely

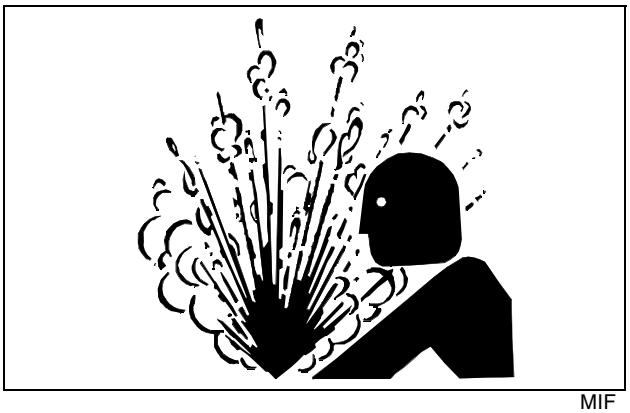

MIF

Explosive release of fluids from pressurized cooling system can cause serious burns.

Shut off machine. Only remove filler cap when cool enough to touch with bare hands. Slowly loosen the cap to first stop to relieve the pressure before removing completely.

Handle Chemical Products Safely

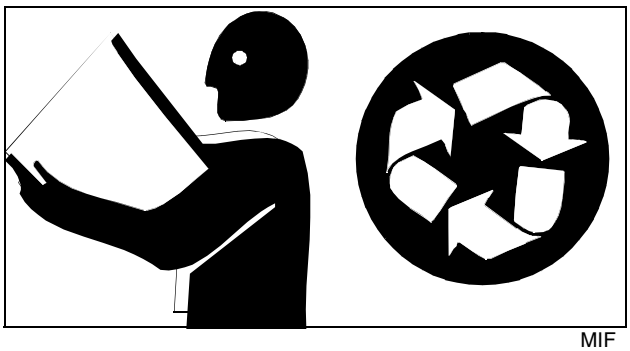

MIF

Direct exposure to hazardous chemicals can cause serious injury. Potentially hazardous chemicals used with John Deere equipment include such items as lubricants, coolants, paints, and adhesives.

A Material Safety Data Sheet (MSDS) provides specific details on chemical products: physical and health hazards, safety procedures, and emergency response techniques. Check the MSDS before you start any job using a hazardous chemical. That way you will know exactly what the risks are and how to do the job safely. Then follow procedures and recommended equipment.

Dispose of Waste Properly

Improperly disposing of waste can threaten the environment and ecology. Potentially harmful waste used with John Deere equipment includes such items as oil, fuel, coolant, brake fluid, filters, and batteries. Use leakproof containers when draining fluids. Do not use food or beverage containers that may mislead someone into drinking from them. Do not pour waste onto the ground, down a drain, or into any water source. Inquire on the proper way to recycle or dispose of waste from your local environmental or recycling center, or from your John Deere dealer.

LIVE WITH SAFETY



MIF

Before returning machine to customer, make sure machine is functioning properly, especially the safety systems. Install all guards and shields.

SPECIFICATIONS AND INFORMATION TABLE OF CONTENTS

Table of Contents

Specifications 9
General Specifications 9
General Information.....12
Metric Fastener Torque Values.....12
Inch Fastener Torque Values.....13
Face Seal Fittings with Inch Stud Ends Torque 14
Face Seal Fittings with Metric Stud Ends Torque 15
O-Ring Face Seal Fittings 16
O-Ring Boss Fittings 16
Using Proper Fuel (Diesel) - North America.17
Diesel Fuel - Europe.....17
Diesel Fuel Storage.....18
4-Cycle Diesel Engine Oil - North America ..18
4-Cycle Diesel Engine Oil - Europe.....18
Transmission and Hydraulic Oil.....19
Grease - North America 19
Grease - Europe.....19
Alternative Lubricants.....19
Synthetic Lubricants.....20
Lubricant Storage 20
Mixing of Lubricants 20
Oil Filters 20
Diesel Engine Coolant - North America.....20
Diesel Engine Coolant Drain Interval - North America 21
Diesel Engine Coolant - Europe 21
Diesel Engine Coolant Drain Interval - Europe.....21
Identification Numbers.....22
Serial Number Location.....22
Machine Identification Number.....22
Engine Serial Number 22
Cutting Unit Serial Numbers.....22

SPECIFICATIONS AND INFORMATION TABLE OF CONTENTS

Specifications

General Specifications

Engine Diesel

Machine Models Used On	7500, 7700
Make	Yanmar
Model	3TNV84T
Output Power	27.7 kW (37.1 hp)
Machine Models USed On	8500, 8700, 8800
Make	Yanmar
Model	3TNV84HT
Output Power	30.2 kW (40.5 hp)
Type	4-cycle diesel
Cylinders	3
Bore	84 mm (3.31 in.)
Stroke	90 mm (3.54 in.)
Displacement	1.496 L (91.3 cu. in.)
Firing Order	1-3-2
Direction of Rotation	Counterclockwise (viewed from flywheel)
Combustion System	Direct injection type
Compression Ratio	18:1
Cooling	Liquid
Governor	Centrifugal
RPM at Slow Idle	1400 ± 50
RPM at Fast Idle (No-Load)	2800 ± 50
Rated RPM	2600
Torque Rise	20 percent minimum

Electrical Specifications

Battery Voltage	12
Starter Type	Solenoid shift
Alternator	Iskra

Hydraulic Power Train

Triple Charge Pump (Front Gear Set)

Make	Hema
Flow	19.6 L/min (5.2 gpm)
Required Pressure at Hydro Input	414-1103 kPa (60-160 psi)

Filter

Type	Spin on
Clogged Filter Bypasses Fluid to Tank At	345 kPa (50 psi)
Filter Bypass Light Comes On At	276 kPa (40 psi)

Hydrostatic Transmission (7000 Series)

Make	Eaton
Model	72400 Series
Displacement	40.6 cm³/rev (2.48 in³/rev)
Type	Servo Controlled Variable Displacement Piston Pump
Main Relief Valve Setting	31 026 ± 1379 kPa (4500 ± 200 psi)
Charge Relief Valve Setting	1241 - 1517 kPa (180 - 220 psi)

Hydrostatic Transmission (8000 Series)

Make	Eaton
Model	72400 Series
Displacement	49.2 cm³/rev (3.00 in³/rev)
Type	Servo Controlled Variable Displacement Piston Pump
Main Relief Valve Setting	31 026± 1379 kPa (4500 ± 200 psi)
Charge Relief Valve Setting	1241 - 1517 kPa (180 - 220 psi)

Front Wheel Motors (7000 Series)

Make	Parker Hannifin
Left Model	TH Series
Right Model	TH Series
Displacement	280 cc³/rev (17.1 in³/rev)

Front Wheel Motors (8000 Series)

Make	Parker Hannifin
Left Model	TH Series
Right Model	TH Series
Displacement	310 cc³/rev (19.0 in³/rev)

Rear Wheel Motors (8700 and 8800)

Make	Parker Hannifin
Model	TF Series
Displacement	240 cc³/rev (14.5 in³/rev)

Hydraulic

Triple Pump (Front Gear Set)

Make	Hema
Flow	20.8 L/min (5.5 gpm)
Relief Valve Setting - 7500, 7700, 8500, and 8700 (In Hydrostatic Pump)	1241-1517 kPa (180-220 psi)
Relief Valve Setting - 8800 (In Hydrostatic Pump)	1241-1517 kPa (180-220 psi)

Reel Pumps

Make	Hema
Flow	32.6 L/min (8.6 gpm)
Type	Gear, positive displacement

Rotary Mower Pumps

Make	Hema
Flow	36 L/min (9.5 gpm)
Type	Gear, positive displacement

Reel Motors

Make	Danfoss
Displacement (Standard Reels)	13.9 cm^3 (0.85 cu in.)
Displacement (Heavy Duty Reels)	19 cm^3 (1.16 cu in.)
Type	Gear, with case drain flow

Rotary Mower Motors

Make	Danfoss
Displacement	12.6 cm^3 (0.77 cu in.)
Type	Gear, with case drain flow

Reel Speeds @ 2800 Engine RPM (Engine Not Loaded)

7000 Reels (Standard)	2250 ± 150 rpm
8000 Reels (Heavy Duty)	1650 ± 150 rpm

Rotary Mower Speeds @ 2800 Engine RPM (Engine Not Loaded)

8800 Mowers	2800 ± 150 rpm

Front Inboard and Rear Lift Cylinders

Stroke	152 mm (6 in.)
Compressed Length	289 mm (6 in.)

Front Outer Lift Cylinder

Stroke	203 mm (8 in.)
Compressed Length 7500, 7700, 8500, 8700	975 mm (38-3/8 in.)
Compressed Length 8800	1032 mm (40-5/8 in.)

Hydraulic Filter

Type	10 micron spin-on
Clogged Filter Bypasses Fluid to Tank At	344.74 kPa (50 psi)
Filter Bypass Light Comes On At	275.79 kPa (40 psi)

Brakes

Brake Type	Mechanical

Attachments - Cutting Units

Make	John Deere
Size	55.9 cm (22 in.)
Backlapping	On machine, variable speed
Clip Ratio	See Theory of Operation (Performance Variables)
Front Rollers	Choice of smooth, grooved, or spiral
Reel Diameter	12.7 cm (5 in.)
Bed Knife Adjustment	Reel-to-bed knife
Height-of-Cut	2.38 to 19 mm (3/32 to 3/4 in.)
Number of Blades (Standard)	9 (greens)
Number of Blades (Optional)	5 (fairways)
Cutting Unit Drive	Hydraulic
Bed Knife Standard	3 mm (1/8 in.)
Bed Knife Tournament	2.38 mm (3/32 in.)
Bed Knife Fairway	6.5 mm (1/4 in.)

General Information

Metric Fastener Torque Values

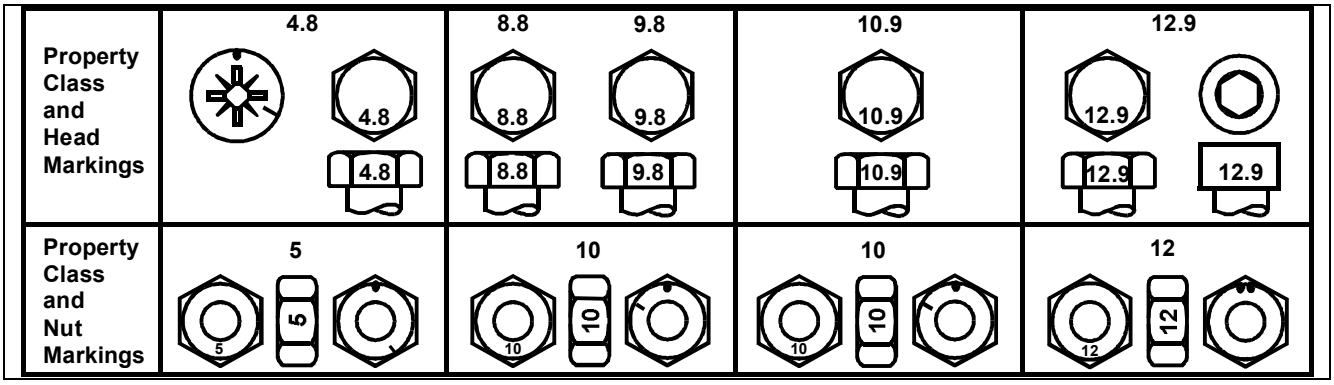

MIF (TS1163)

	Class 4.8				Class 8.8 or 9.8				Class 10.9				Class 12.9			
	Lubricated[1]		Dry[a]		Lubricated[a]		Dry[a]		Lubricated[a]		Dry[a]		Lubricated[a]		Dry[a]	
SIZE	N•m	lb-ft	N•m	lb-ft	N•m	lb-ft	N•m	lb-ft	N•m	lb-ft	N•m	lb-ft	N•m	lb-ft	N•m	lb-ft
M6	4.8	3.5	6	4.5	9	6.5	11	8.5	13	9.5	17	12	15	11.5	19	14.5
M8	12	8.5	15	11	22	16	28	20	32	24	40	30	37	28	47	35
M10	23	17	29	21	43	32	55	40	63	47	80	60	75	55	95	70
M12	40	29	50	37	75	55	95	70	110	80	140	105	130	95	165	120
M14	63	47	80	60	120	88	150	110	175	130	225	165	205	150	260	109
M16	100	73	125	92	190	140	240	175	275	200	350	225	320	240	400	300
M18	135	100	175	125	260	195	330	250	375	275	475	350	440	325	560	410
M20	190	140	240	180	375	275	475	350	530	400	675	500	625	460	800	580
M22	260	190	330	250	510	375	650	475	725	540	925	675	850	625	1075	800
M24	330	250	425	310	650	475	825	600	925	675	1150	850	1075	800	1350	1000
M27	490	360	625	450	950	700	1200	875	1350	1000	1700	1250	1600	1150	2000	1500
M30	675	490	850	625	1300	950	1650	1200	1850	1350	2300	1700	2150	1600	2700	2000
M33	900	675	1150	850	1750	1300	2200	1650	2500	1850	3150	2350	2900	2150	3700	2750
M36	1150	850	1450	1075	2250	1650	2850	2100	3200	2350	4050	3000	3750	2750	4750	3500

1. "Lubricated" means coated with a lubricant such as engine oil, or fasteners with phosphate and oil coatings. "Dry" means plain or zinc plated (yellow dichromate - Specification JDS117) without any lubrication.

DO NOT use these hand torque values if a different torque value or tightening procedure is given for a specific application. Torque values listed are for general use only and include a ±10% variance factor. Check tightness of fasteners periodically. DO NOT use air powered wrenches.

Shear bolts are designed to fail under predetermined loads. Always replace shear bolts with identical grade.

Fasteners should be replaced with the same class. Make sure fastener threads are clean and that you properly start thread engagement. This will prevent them from failing when tightening.

When bolt and nut combination fasteners are used, torque values should be applied to the NUT instead of the bolt head.

Tighten toothed or serrated-type lock nuts to the full torque value.

Reference: JDS-G200.

Inch Fastener Torque Values

SAE Grade and Head Markings	No Marks 		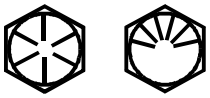
SAE Grade and Nut Markings	No Marks 		

MIF (TS1162)

	Grade 1				Grade 2[1]				Grade 5, 5.1 or 5.2				Grade 8 or 8.2			
	Lubricated[2]		Dry[2]		Lubricated[2]		Dry[2]		Lubricated[2]		Dry[2]		Lubricated[2]		Dry[2]	
SIZE	N•m	lb-ft	N•m	lb-ft	N•m	lb-ft	N•m	lb-ft	N•m	lb-ft	N•m	lb-ft	N•m	lb-ft	N•m	lb-ft
1/4	3.7	2.8	4.7	3.5	6	4.5	7.5	5.5	9.5	7	12	9	13.5	10	17	12.5
5/16	7.7	5.5	10	7	12	9	15	11	20	15	25	18	28	21	35	26
3/8	14	10	17	13	22	16	27	20	35	26	44	33	50	36	63	46
7/16	22	16	28	20	35	26	44	32	55	41	70	52	80	58	100	75
1/2	33	25	42	31	53	39	67	50	85	63	110	80	120	90	150	115
9/16	48	36	60	45	75	56	95	70	125	90	155	115	175	130	225	160
5/8	67	50	85	62	105	78	135	100	170	125	215	160	215	160	300	225
3/4	120	87	150	110	190	140	240	175	300	225	375	280	425	310	550	400
7/8	190	140	240	175	190	140	240	175	490	360	625	450	700	500	875	650
1	290	210	360	270	290	210	360	270	725	540	925	675	1050	750	1300	975
1-1/8	470	300	510	375	470	300	510	375	900	675	1150	850	1450	1075	1850	1350
1-1/4	570	425	725	530	570	425	725	530	1300	950	1650	1200	2050	1500	2600	1950
1-3/8	750	550	950	700	750	550	950	700	1700	1250	2150	1550	2700	2000	3400	2550
1-1/2	1000	725	1250	925	990	725	1250	930	2250	1650	2850	2100	3600	2650	4550	3350

1. "Grade 2" applies for hex cap screws (not hex bolts) up to 152 mm (6 in.) long. "Grade 1" applies for hex cap screws over 152 mm (6 in.) long, and for all other types of bolts and screws of any length.

2. "Lubricated" means coated with a lubricant such as engine oil, or fasteners with phosphate and oil coatings. "Dry" means plain or zinc plated (yellow dichromate - Specification JDS117) without any lubrication.

DO NOT use these hand torque values if a different torque value or tightening procedure is given for a specific application. Torque values listed are for general use only and include a ±10% variance factor. Check tightness of fasteners periodically. DO NOT use air powered wrenches.

Shear bolts are designed to fail under predetermined loads. Always replace shear bolts with identical grade.

Fasteners should be replaced with the same grade. Make sure fastener threads are clean and that you properly start thread engagement. This will prevent them from failing when tightening.

When bolt and nut combination fasteners are used, torque values should be applied to the NUT instead of the bolt head.

Tighten toothed or serrated-type locknuts to the full torque value.

Reference: JDS-G200.

Face Seal Fittings with Inch Stud Ends Torque

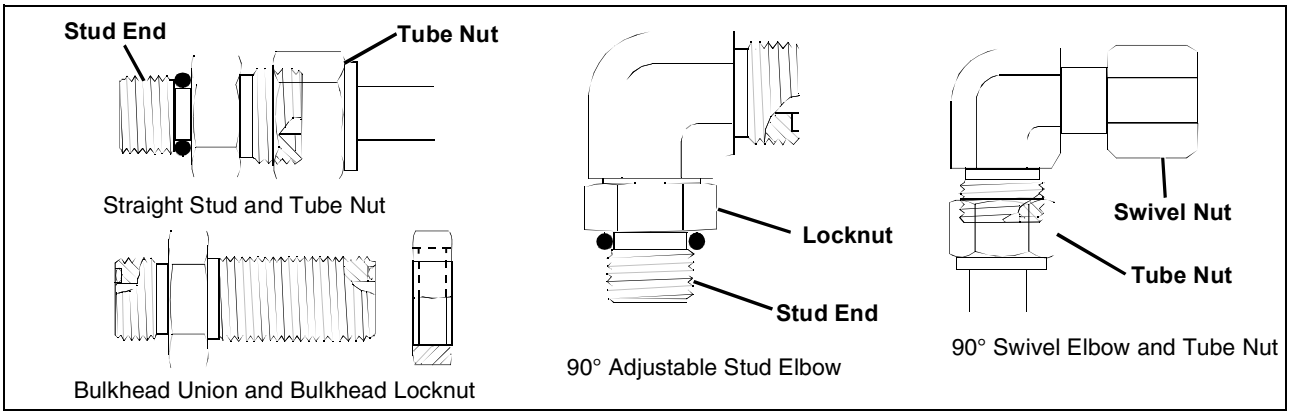

MIF

Nominal Tube OD/Hose ID				Face Seal Tube/Hose End					O-Ring Stud Ends		
Metric Tube OD	Inch Tube OD			Thread Size	Tube Nut/ Swivel Nut Torque		Bulkhead Locknut Torque		Thread Size	Straight Fitting or Locknut Torque	
mm	Dash Size	in.	mm	in.	N•m	lb-ft	N•m	lb-ft	in.	N•m	lb-ft
	-3	0.188	4.76						3/8-24	8	6
6	-4	0.250	6.35	9/16-18	16	12	12	9	7/16-20	12	9
8	-5	0.312	7.94						1/2-20	16	12
10	-6	0.375	9.52	11/16-16	24	18	24	18	9/16-18	24	18
12	-8	0.500	12.70	13/16-16	50	37	46	34	3/4-16	46	34
16	-10	0.625	15.88	1-14	69	51	62	46	7/8-14	62	46
	-12	0.750	19.05	1-3/16-12	102	75	102	75	1-1/16-12	102	75
22	-14	0.875	22.22	1-3/16-12	102	75	102	75	1-3/16-12	122	90
25	-16	1.000	25.40	1-7/16-12	142	105	142	105	1-5/16-12	142	105
32	-20	1.25	31.75	1-11/16-12	190	140	190	140	1-5/8-12	190	140
38	-24	1.50	38.10	2-12	217	160	217	160	1-7/8-12	217	160

Note: Torque tolerance is +15%, -20%.

Face Seal Fittings with Metric Stud Ends Torque

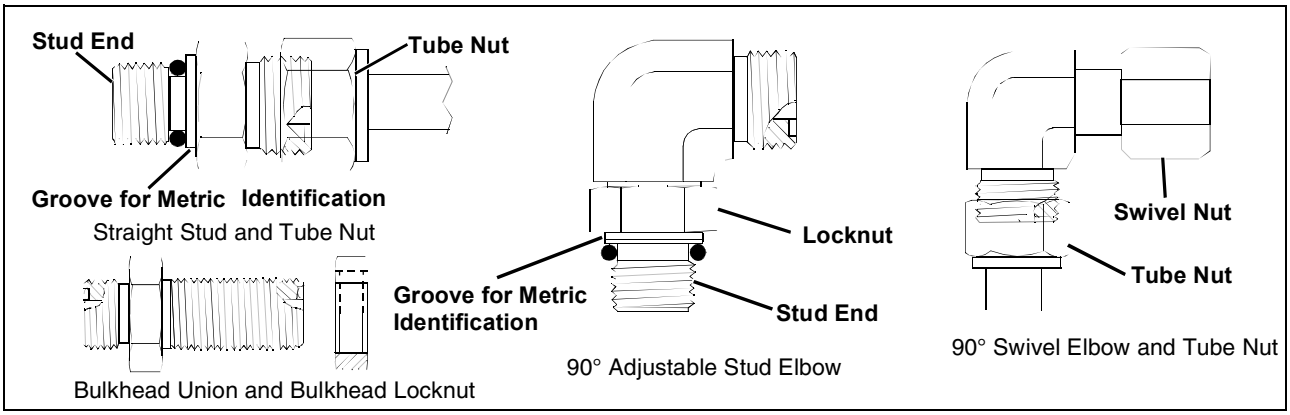

MIF

Nominal Tube OD/Hose ID				Face Seal Tube/Hose End						O-Ring Stud Ends, Straight Fitting or Locknut					
Metric Tube OD	Inch Tube OD			Thread Size	Hex Size	Tube Nut/ Swivel Nut Torque		Bulkhead Locknut Torque		Thread Size	Hex Size	Steel or Gray Iron Torque		Aluminum Torque	
mm	Dash Size	in.	mm	in.	mm	N•m	lb-ft	N•m	lb-ft	mm	mm	N•m	lb-ft	N•m	lb-ft
6	-4	0.250	6.35	9/16-18	17	16	12	12	9	M12x1.5	17	21	15.5	9	6.6
8	-5	0.312	7.94												
										M14x1.5	19	33	24	15	11
10	-6	0.375	9.52	11/16-16	22	24	18	24	18	M16x1.5	22	41	30	18	13
12	-8	0.500	12.70	13/16-16	24	50	37	46	34	M18x1.5	24	50	37	21	15
16	-10	0.625	15.88	1-14	30	69	51	62	46	M22x1.5	27	69	51	28	21
	-12	0.750	19.05	1-3/16-12	36	102	75	102	75	M27x2	32	102	75	46	34
22	-14	0.875	22.22	1-3/16-12	36	102	75	102	75	M30x2	36				
25	-16	1.000	25.40	1-7/16-12	41	142	105	142	105	M33x2	41	158	116	71	52
28										M38x2	46	176	130	79	58
32	-20	1.25	31.75	1-11/16-12	50	190	140	190	140	M42x2	50	190	140	85	63
38	-24	1.50	38.10	2-12	60	217	160	217	160	M48x2	55	217	160	98	72

Note: Torque tolerance is +15%, -20%.

O-Ring Face Seal Fittings

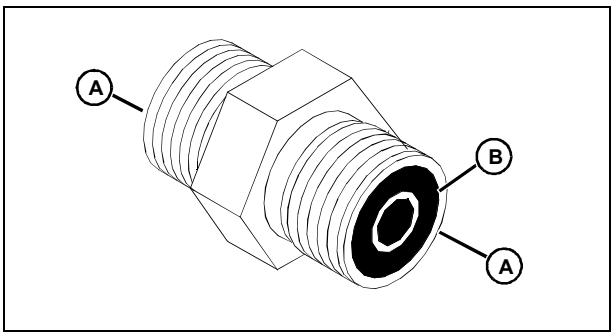

MIF

1. Inspect the fitting sealing surfaces (A). They must be free of dirt or defects.

2. Inspect the O-ring (B). It must be free of damage or defects.

3. Lubricate O-rings and install into groove using petroleum jelly to hold in place.

4. Push O-ring into the groove with plenty of petroleum jelly so O-ring is not displaced during assembly.

5. Index angle fittings and tighten by hand-pressing joint together to ensure O-ring remains in place.

Important: Avoid Damage! DO NOT allow hoses to twist when tightening fittings. Use two wrenches to tighten hose connections: one to hold the hose, and the other to tighten the swivel fitting.

6. Tighten fitting or nut to torque value shown on the chart per dash size stamped on the fitting.

O-Ring Boss Fittings

1. Inspect O-ring boss seat. It must be free of dirt and defects. If repeated leaks occur, inspect for defects with a magnifying glass. Some raised defects can be removed with a slip stone.

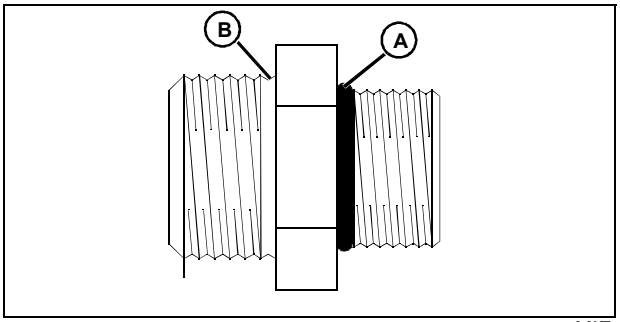

MIF

2. Put hydraulic oil or petroleum jelly on the O-ring (A). Place electrical tape over the threads to protect O-ring from nicks. Slide O-ring over the tape and into the groove (B) of fitting. Remove tape.

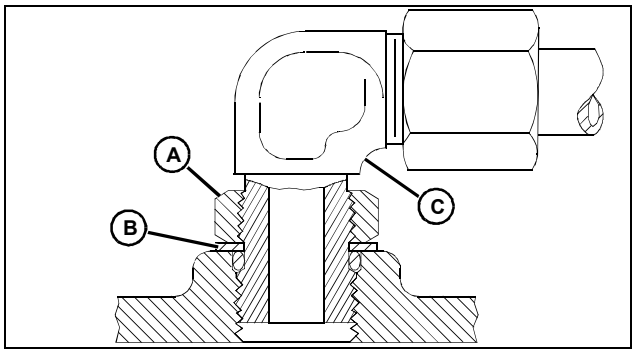

MIF

3. For angle fittings, loosen special nut (A) and push special washer (B) against threads so O-ring can be installed into the groove of fitting.

4. Turn fitting into the boss by hand until special washer or washer face (straight fitting) contacts boss face and O-ring is squeezed into its seat.

5. To position angle fittings (C), turn the fitting counter-clockwise a maximum of one turn.

6. Tighten straight fittings to torque value shown on chart. For angle fittings, tighten the special nut to value shown on the chart while holding body of fitting with a wrench.

Thread Size	Torque[1]		Number of Flats[2]
	N•m	lb-ft	
3/8-24 UNF	8	6	2
7/16-20 UNF	12	9	2
1/2-20 UNF	16	12	2
9/16-18 UNF	24	18	2
3/4-16 UNF	46	34	2
7/8-14 UNF	62	46	1-1/2
1-1/16-12 UN	102	75	1
1-3/16-12 UN	122	90	1
1-5/16-12 UN	142	105	3/4
1-5/8-12 UN	190	140	3/4
1-7/8-12 UN	217	160	1/2

1. Torque tolerance is ±10 percent.

2. To be used if a torque wrench cannot be used. After tightening fitting by hand, put a mark on nut or boss, then tighten special nut or straight fitting the number of flats shown.

Using Proper Fuel (Diesel) - North America

Use the proper diesel fuel to help prevent decreased engine performance and increased exhaust emissions. Failure to follow the fuel requirements listed below can void your engine warranty.

Contact your local fuel distributor for properties of the diesel fuel in your area.

In general, diesel fuels are blended to satisfy the low temperature requirements of the geographical area in which they are marketed.

Diesel fuels specified to EN 590 or ASTM D975 are recommended.

Required fuel properties

In all cases, the fuel shall meet the following properties:

Cetane number of 45 minimum. Cetane number greater than 50 is preferred, especially when temperatures are below -20°C (-4°F) or elevations above 1500 m (5000 ft).

Cold Filter Plugging Point (CFPP) below the expected low temperature OR **Cloud Point** at least 5°C (9°F) below the expected low temperature.

Fuel lubricity should pass a minimum load level of 3100 grams as measured by ASTM D6078 or maximum scar diameter of 0.45 mm as measured by ASTM D6079 or ISO 12156-1.

If a fuel of low or unknown lubricity is used, addition of John Deere PREMIUM DIESEL FUEL CONDITIONER at the specified concentration is recommended.

Sulfur content

- Diesel fuel quality and fuel sulfur content must comply with all existing emissions regulations for the area in which the engine operates.
- Sulfur content less that 0.05% (500 ppm) is recommended for best performance.
- Diesel fuel sulfur content greater than 0.5% (5000 ppm) should not be used.

Important: Avoid Damage! Do not mix diesel engine oil or any other type of lubricating oil with diesel fuel.

Handling and Storing Diesel Fuel

Caution: Avoid Injury! Handle fuel carefully. Do not fill the fuel tank when engine is running.

Do not smoke while you fill the fuel tank or service the fuel system.

Important: Avoid Damage! Do not use galvanized containers - diesel fuel stored in galvanized containers reacts with zinc coating in the container to form zinc flakes. If fuel contains water, a zinc gel will also form. The gel and flakes will quickly plug fuel filters and damage fuel injectors and fuel pumps.

- Fill fuel tank at end of each day's operation to prevent water condensation and freezing during cold weather.

Important: Avoid Damage! The fuel tank is vented through the filler cap. If a new cap is required, always replace it with an original vented cap.

- When fuel is stored for an extended period or if there is a slow turnover of fuel, add a fuel conditioner to stabilize the fuel and to prevent water condensation. Contact your fuel supplier for recommendations.

Diesel Fuel - Europe

In general, diesel fuels are blended to satisfy the low air temperature requirements of the geographical area in which they are sold.

In Europe, diesel fuel is usually specified to **EN590** and sold in five different classes or six different grades.

If diesel fuels being supplied in your area DO NOT meet any of the above specifications, use diesel fuels with the following equivalent properties:

- Cetane Number 40 (Min)

A cetane number greater than 50 is preferred, especially for air temperatures below -20°C (-4°F) or elevations above 1500 m (5000 ft).

- Cold Filter Plugging Point (CFPP)

The temperature at which diesel fuel begins to cloud or jell. Use diesel fuels with a CFPP which is at least 5°C (9°F) below the expected low air temperature.

- Sulfur Content of 0.05% (Max)

If diesel fuel being used has a sulfur content greater than 0.05%, reduce the service interval for engine oil and filter by 50%.

Consult your local diesel fuel distributor for properties of the diesel fuel available in your area.

Diesel Fuel Storage

Important: Avoid Damage! DO NOT USE GALVANIZED CONTAINERS - diesel fuel stored in galvanized containers reacts with zinc coating in the container to form zinc flakes. If fuel contains water, a zinc gel will also form. The gel and flakes will quickly plug fuel filters and damage fuel injectors and fuel pumps.

It is recommended that diesel fuel be stored ONLY in a clean, approved POLYETHYLENE PLASTIC container WITHOUT any metal screen or filter. This will help prevent any accidental sparks from occurring. Store fuel in an area that is well ventilated to prevent possible igniting of fumes by an open flame or spark; this includes any appliance with a pilot light.

Important: Avoid Damage! Keep all dirt, scale, water, or other foreign material out of fuel.

Keep fuel in a safe, protected area and in a clean, properly marked (“DIESEL FUEL”) container. DO NOT use deicers to attempt to remove water from fuel. DO NOT depend on fuel filters to remove water from fuel. It is recommended that a water separator be installed in the storage tank outlet. BE SURE to properly discard unstable or contaminated diesel fuel and/or their containers when necessary.

4-Cycle Diesel Engine Oil - North America

Use oil viscosity based on the expected air temperature range during the period between oil changes.

The following John Deere oils are preferred:

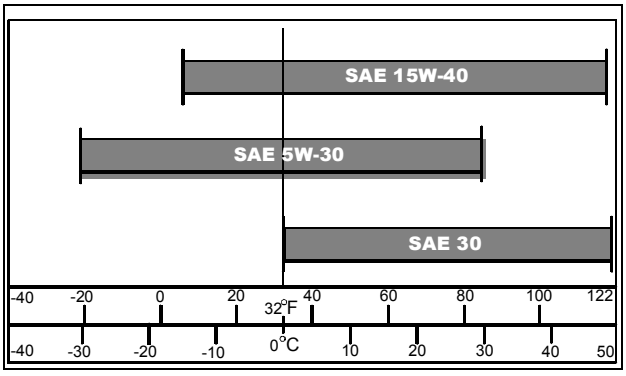

- PLUS-50™
- TORQ-GARD SUPREME™

Other oils may be used if above John Deere oils are not available, provided they meet the following specifications:

- API Service Classification CF or higher.

4-Cycle Diesel Engine Oil - Europe

Use oil viscosity based on the expected air temperature range during the period between oil changes.

The following John Deere oils are preferred:

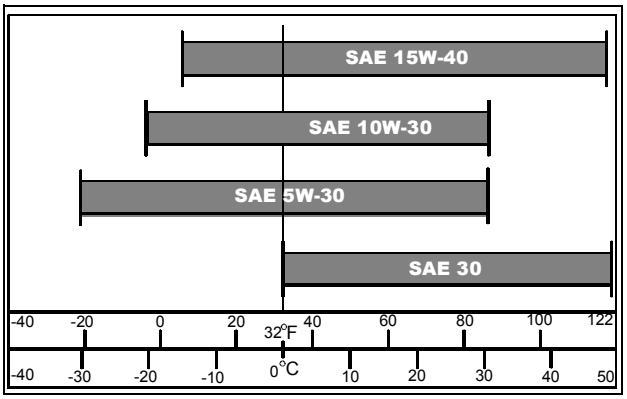

- TORQ-GARD SUPREME®- SAE 15W-40.
- UNI-GARD® - SAE 15W-40.
- TORQ-GARD SUPREME - SAE 5W-30.
- TORQ-GARD SUPREME - SAE 5W-30.
- UNI-GARD - SAE 5W-30.

The following John Deere oils are also recommended, based on their specified temperature range:

- TORQ-GARD SUPREME- SAE 10W-30.
- UNI-GARD - SAE 10W-30.
- TORQ-GARD SUPREME - SAE 30.
- UNI-GARD - SAE 30.

Other oils may be used if above John Deere oils are not available, provided they meet the following specification:

- CCMC Specification D4 or Mercedes Benz MB228.1 or higher.

Transmission and Hydraulic Oil

Important: Avoid Damage! Machine is filled with John Deere HY-GARD™ (J20C) Transmission/ Hydraulic Oil at the factory. DO NOT mix oils. DO NOT use type "F" automatic transmission fluid or J20D Low Viscosity HY-GARD.

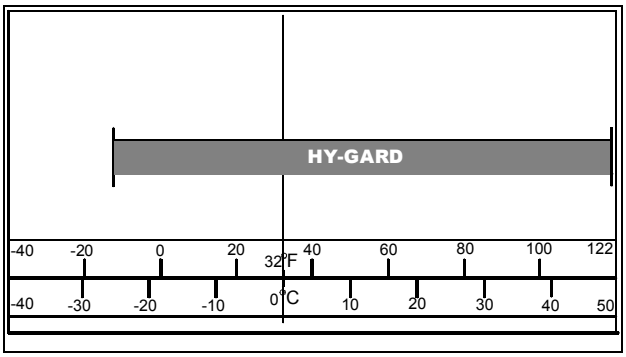

MIF

Use the following oil viscosity based on the air temperature range. Operating outside of the recommended oil air temperature range may cause premature hydrostatic transmission failure.

John Deere HY-GARD™ (J20C) Transmission Oil is specially formulated to provide maximum protection against. mechanical wear, corrosion, and foaming.

Grease - North America

Important: Avoid Damage! ONLY use a quality grease in this application. DO NOT mix any other greases in this application. DO NOT use any BIO-GREASE in this application.

The following John Deere greases are preferred for the machine and lift arms:

- **John Deere Multi-Purpose SD Polyurea Grease (TY6341).**
- **John Deere Special-Purpose HD Moly (TY6333).**

The following John Deere greases are preferred for the cutting units and unit attachments:

- **John Deere Special Purpose Golf and Turf Cutting Unit Grease (TY25083).**
- **John Deere Special Purpose Cornhead Grease (AN102562).**
- **John Deere Multi-Purpose SD Polyurea Grease (TY6341).**

Other greases may be used if above preferred John Deere greases are not available, provided they meet the following specifications:

- Polyurea Grease - NLGI Grade 2.
- Calcium Complex Grease - NLGI Grade 2.
- John Deere Standard JDM J13E4 - NLGI Grade 2.

Grease - Europe

Use the following grease based on the air temperature range. Operating outside of the recommended grease air temperature range may cause premature failures.

Important: Avoid Damage! ONLY use a quality grease in this application. DO NOT mix any other greases in this application. DO NOT use any BIO-GREASE in this application.

The following John Deere greases are PREFERRED:

- **GREASE-GARD™ - JDM J13E4, NLGI Grade 2.**
- **Reel Support Grease - JDM J13E6, NLGI Grade 0.**

Other greases may be used if above preferred John Deere greases are not available, provided they meet the following specifications:

Reel Support Grease Applications:

- Polyurea Grease - NLGI Grade 2.
- Calcium Complex Grease - Grade 2.
- Lithium Complex Grease - NLGI Grade 0.
- John Deere Standard JDM J13E4 - NLGI Grade 2.

Alternative Lubricants

Conditions in certain geographical areas outside the United States and Canada may require different lubricant recommendations than the ones printed in this technical manual or the operator's manual. Consult with your John Deere Dealer, or Sales Branch, to obtain the alternative lubricant recommendations.

Important: Avoid Damage! Use of alternative lubricants could cause reduced life of the component.

If alternative lubricants are to be used, it is recommended that the factory fill be thoroughly removed before switching to any alternative lubricant.

Synthetic Lubricants

Synthetic lubricants may be used in John Deere equipment if they meet the applicable performance requirements (industry classification and/or military specification) as shown in this manual.

The recommended air temperature limits and service or lubricant change intervals should be maintained as shown in the operator's manual.

Avoid mixing different brands, grades, or types of oil. Oil manufacturers blend additives in their oils to meet certain specifications and performance requirements. Mixing different oils can interfere with the proper functioning of these additives and degrade lubricant performance.

Lubricant Storage

All machines operate at top efficiency only when clean lubricants are used. Use clean storage containers to handle all lubricants. Store them in an area protected from dust, moisture, and other contamination. Store drums on their sides. Make sure all containers are properly marked as to their contents. Dispose of all old, used containers and their contents properly.

Mixing of Lubricants

In general, avoid mixing different brands or types of lubricants. Manufacturers blend additives in their lubricants to meet certain specifications and performance requirements. Mixing different lubricants can interfere with the proper functioning of these additives and lubricant properties which will downgrade their intended specified performance.

Oil Filters

Important: Avoid Damage! Filtration of oils is critical to proper lubrication performance. Always change filters regularly.

The following John Deere oil filters are PREFERRED:

- **Automotive and light truck engine oil filters**.

Most John Deere filters contain pressure relief and anti-drainback valves for better engine protection.

Other oil filters may be used if above recommended John Deere oil filters are not available, provided they meet the following specification:

- ASTB Tested in Accordance with SAE J806.

Diesel Engine Coolant - North America

Important: Avoid Damage! Using incorrect coolant mixture can damage the radiator:

- **Do not operate engine with plain water.**
- **Use ethylene-glycol based antifreeze approved for use in aluminum radiators or aluminum engines.**
- **Do not exceed a 50% mixture of coolant and water.**
- **Do not pour coolant or water into the radiator when the engine is hot.**

The following John Deere coolants are preferred:

- COOL-GARD™ PRE-DILUTED SUMMER COOLANT (TY16036).
- COOL-GARD™ CONCENTRATED SUMMER COOLANT (TY16034).

If neither of recommended engine coolants is available, use a glycol base coolant that meets the following specification:

- ASTM D4985 (JDM H24A2).

Check container label before using to be sure it has the appropriate specifications for your machine. Use coolant with conditioner or add conditioner to coolant before using.

If using concentrate, mix approximately 50 percent antifreeze with 50 percent distilled or deionized water before adding to cooling system. This mixture will provide freeze protection to -37 degrees C (-34 degrees F).

Certain geographical areas may require lower temperature protection. See the label on your antifreeze container or consult your John Deere dealer to obtain the latest information and recommendations. Never exceed the maximum dilution rate for the coolant you are using. Exceeding the maximum rate will greatly reduce the coolant effectiveness.