200LC Excavator Operation and Tests

TECHNICAL MANUAL
200LC Excavator Operation and Tests

TM1663 28NOV01 (ENGLISH)

For complete service information also see:

200LC Excavator Repair	**TM1664**
POWERTECH® 4.5 L & 6.8 L (4045 and 6068) Diesel Engines.	**CTM104**
Alternators and Starting Motors.	**CTM77**
Undercarriage Appraisal Manual	**SP326**

Worldwide Construction And Forestry Division
LITHO IN U.S.A.

Introduction

Foreword

This manual is written for an experienced technician. Essential tools required in performing certain service work are identified in this manual and are recommended for use.

Live with safety: Read the safety messages in the introduction of this manual and the cautions presented throughout the text of the manual.

 This is the safety-alert symbol. When you see this symbol on the machine or in this manual, be alert to the potential for personal injury.

Technical manuals are divided in two parts: repair and operation and tests. Repair sections tell how to repair the components. Operation and tests sections help you identify the majority of routine failures quickly.

Information is organized in groups for the various components requiring service instruction. At the beginning of each group are summary listings of all applicable essential tools, service equipment and tools, other materials needed to do the job, service parts kits, specifications, wear tolerances, and torque values.

Technical Manuals are concise guides for specific machines. They are on-the-job guides containing only the vital information needed for diagnosis, analysis, testing, and repair.

Fundamental service information is available from other sources covering basic theory of operation, fundamentals of troubleshooting, general maintenance, and basic type of failures and their causes.

DX,TMIFC –19–29SEP98–1/1

Technical Information Feedback Form

We need your help to continually improve our technical publications. Please copy this page and FAX or mail your comments, ideas and improvements.

SEND TO: John Deere Dubuque Works
P.O. Box 538
Attn: Publications Supervisor, Dept. 303
Dubuque, IA 52004-0538

FAX NUMBER: 563-589-5800

Ideas, Comments (Please State Page Number): _____

OVERALL, how would you rate the quality of this publication? (Check one)

Poor		Fair		Good		Very Good		Excellent	
1	2	3	4	5	6	7	8	9	10

Company Name: _____

Technician Name: _____

Address: _____

Phone: _____

Fax No.: _____

Dealer Acct. No.: _____

THANK YOU!

TX,TM,FAX –19–28NOV01–1/1

Contents

SECTION 9000—General Information
Group 01—Safety
Group 02—General Specifications
Group 03—Torque Values
Group 04—Fuels and Lubricants

SECTION 9005—Operational Checkout Procedure
Group 10—Operational Checkout Procedure

SECTION 9010—Engine
Group 05—Theory of Operation
Group 10—System Operational Checks
Group 15—Diagnostic Information
Group 20—Adjustments
Group 25—Tests

SECTION 9015—Electrical System
Group 05—System Information
Group 10—System Diagrams
Group 15—Sub-System Diagnostics
Group 20—References

SECTION 9020—Power Train
Group 05—Theory of Operation
Group 15—Diagnostic Information
Group 20—Adjustments

SECTION 9025—Hydraulic System
Group 05—Theory of Operation
Group 15—Diagnostic Information
Group 20—Adjustment
Group 25—Tests

SECTION 9031—Air Conditioning System
Group 05—Theory of Operation
Group 10—System Operational Checks
Group 15—Diagnostic Information
Group 20—Adjustments
Group 25—Tests

All information, illustrations and specifications in this manual are based on the latest information available at the time of publication. The right is reserved to make changes at any time without notice.

COPYRIGHT © 2002
DEERE & COMPANY
Moline, Illinois
All rights reserved
A John Deere ILLUSTRUCTION® Manual
Previous Editions
Copyright © 2000, 1998, 1996

Click on the image link below for the full version of the service manual



Section 9000
General Information

Contents

Page

Group 01—Safety 9000-01-1

Group 02—General Specifications
Excavator Overview 9000-02-1
200LC Specifications. 9000-02-2
200LC Working Ranges 9000-02-4
200LC Engine Specifications. 9000-02-6
200LC Drain and Refill Capacities. 9000-02-6

Group 03—Torque Values
Unified Inch Bolt and Cap Screw Torque Values 9000-03-1
Metric Bolt and Cap Screw Torque Values 9000-03-2
Additional Metric Cap Screw Torque Values 9000-03-3
Check Oil Lines And Fittings 9000-03-5
Service Recommendations for O-Ring Boss Fittings 9000-03-6
Service Recommendations For Flat Face O-Ring Seal Fittings. 9000-03-8
Service Recommendations for 37° Flare and 30° Cone Seat Connectors 9000-03-9
Service Recommendations For Flared Connections—Straight or Tapered Threads 9000-03-10
Service Recommendations For Inch Series Four Bolt Flange Fittings. 9000-03-11
Service Recommendations for Metric Series Four Bolt Flange Fitting 9000-03-12

Group 04—Fuels and Lubricants
Diesel Fuel 9000-04-1
Lubricity of Diesel Fuels 9000-04-1
Low Sulfur Diesel Fuel Conditioner 9000-04-2
Diesel Fuel Storage. 9000-04-2
Fuel Tank 9000-04-3
Do Not Use Galvanized Containers. 9000-04-3
Diesel Engine Oil 9000-04-4
Hydraulic Oil 9000-04-5
Swing Gearbox, Propel Gearbox and Pump Gearbox Oils 9000-04-6
Track Roller, Front Idler, and Carrier Roller Oil 9000-04-6

Page

Track Adjuster, Working Tool Pivot, Swing Bearing, and Swing Bearing Gear Grease. 9000-04-7
Oil Filters. 9000-04-7
Lubricant Storage 9000-04-8
Alternative and Synthetic Lubricants 9000-04-8
Mixing of Lubricants 9000-04-9

Follow Safe Procedures

Unsafe work practices are dangerous. Understand service procedure before doing work; do not attempt shortcuts.



TS231 –19–07OCT88

TX,05,FF1611 –19–14JUN90–1/1

Prepare for Emergencies

Be prepared if a fire starts.

Keep a first aid kit and fire extinguisher handy.

Keep emergency numbers for doctors, ambulance service, hospital, and fire department near your telephone.

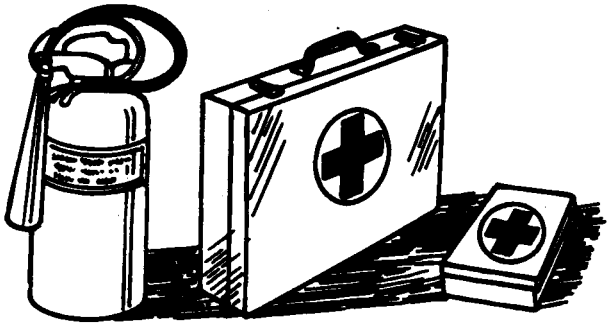

TS291 –UN–23AUG88

DX,FIRE2 –19–03MAR93–1/1

Handle Fluids Safely—Avoid Fires

Handle fuel with care; it is highly flammable. Do not refuel the machine while smoking or when near open flame or sparks. Always stop engine before refueling machine. Fill fuel tank outdoors.



TS202 –UN–23AUG88

TX,05,FF1622 –19–14JUN90–1/2

Store flammable fluids away from fire hazards. Do not incinerate or puncture pressurized containers.

Make sure machine is clean of trash, grease, and debris.

Do not store oily rags; they can ignite and burn spontaneously.



TS227 –UN–23AUG88

TX,05,FF1622 –19–14JUN90–2/2

9000
01
2

Prevent Battery Explosions

Keep sparks, lighted matches, and open flame away from the top of battery. Battery gas can explode.

Never check battery charge by placing a metal object across the posts. Use a volt-meter or hydrometer.

Do not charge a frozen battery; it may explode. Warm battery to 16°C (60°F).



TS204 –UN–23AUG88

DX,SPARKS –19–03MAR93–1/1

Handle Chemical Products Safely

Direct exposure to hazardous chemicals can cause serious injury. Potentially hazardous chemicals used with John Deere equipment include such items as lubricants, coolants, paints, and adhesives.

A Material Safety Data Sheet (MSDS) provides specific details on chemical products: physical and health hazards, safety procedures, and emergency response techniques.

Check the MSDS before you start any job using a hazardous chemical. That way you will know exactly what the risks are and how to do the job safely. Then follow procedures and recommended equipment.

(See your John Deere dealer for MSDS's on chemical products used with John Deere equipment.)

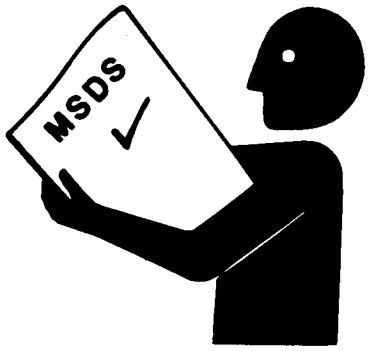

TS1132 –UN–26NOV90

DX,MSDS,NA –19–03MAR93–1/1

Prevent Acid Burns

Sulfuric acid in battery electrolyte is poisonous. It is strong enough to burn skin, eat holes in clothing, and cause blindness if splashed into eyes.

Avoid the hazard by:

1. Filling batteries in a well-ventilated area.
2. Wearing eye protection and rubber gloves.
3. Avoiding breathing fumes when electrolyte is added.
4. Avoiding spilling or dripping electrolyte.
5. Use proper jump start procedure.

If you spill acid on yourself:

1. Flush your skin with water.
2. Apply baking soda or lime to help neutralize the acid.
3. Flush your eyes with water for 15—30 minutes. Get medical attention immediately.

If acid is swallowed:

1. Do not induce vomiting.
2. Drink large amounts of water or milk, but do not exceed 2 L (2 quarts).
3. Get medical attention immediately.

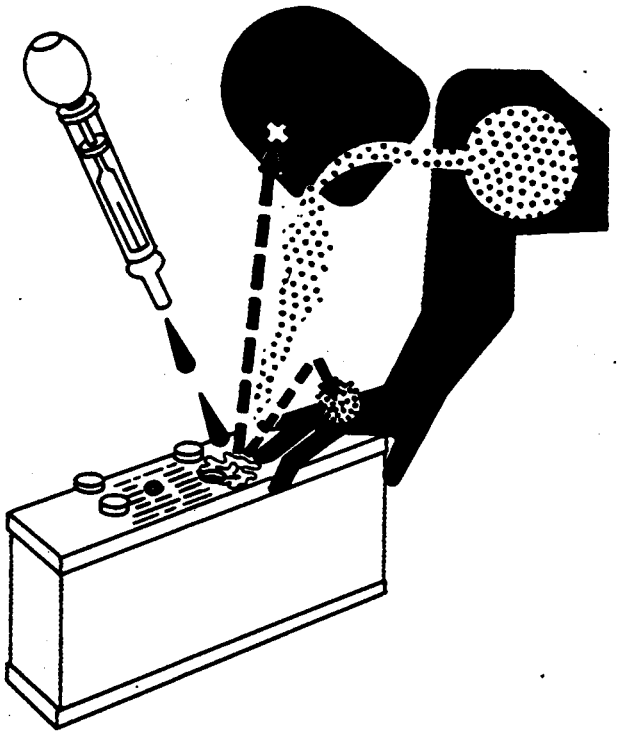

TS203 –UN–23AUG88

DX,POISON –19–21APR93–1/1

9000
01
4

Avoid High-Pressure Fluids

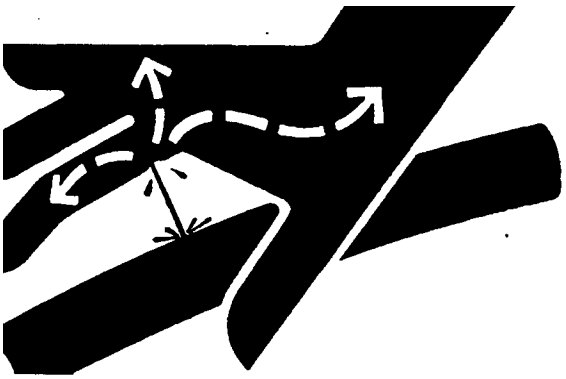

X9811 –UN–23AUG88

Escaping fluid under pressure can penetrate the skin causing serious injury.

Avoid the hazard by relieving pressure before disconnecting hydraulic or other lines. Tighten all connections before applying pressure.

Search for leaks with a piece of cardboard. Protect hands and body from high pressure fluids.

If an accident occurs, see a doctor immediately. Any fluid injected into the skin must be surgically removed within a few hours or gangrene may result. Doctors unfamiliar with this type of injury should reference a knowledgeable medical source. Such information is available from Deere & Company Medical Department in Moline, Illinois, U.S.A.

DX,FLUID –19–03MAR93–1/1

Warn Others of Service Work

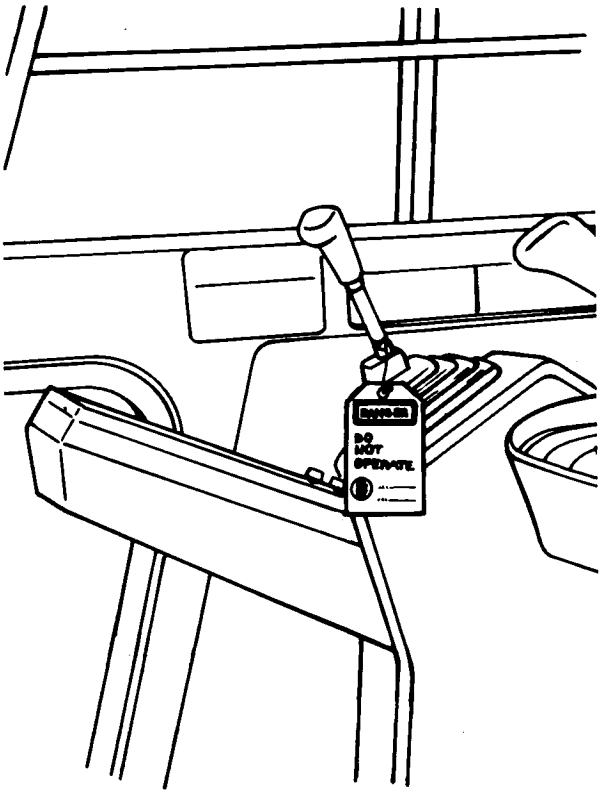

T7273AP –UN–08JUN90

Unexpected machine movement can cause serious injury.

Before performing any work on the machine, attach a “Do Not Operate” tag on the right control lever.

TX,05,RR,566 –19–23JUL91–1/1

Park Machine Safely

Before working on the machine:

- Park machine on a level surface.
- Lower bucket to the ground.
- Turn auto-idle switch off.
- Run engine with engine RPM dial at 1/3 position for 2 minutes.
- Move engine RPM dial to slow idle position.
- Turn key switch to OFF. Remove key from switch.
- Pull pilot control shut-off lever to locked position.
- Allow engine to cool.

TX,05,DH5002 –19–28MAY96–1/1

Support Machine Properly

Always lower the attachment or implement to the ground before you work on the machine. If the work requires that the machine or attachment be lifted, provide secure support for them. If left in a raised position, hydraulically supported devices can settle or leak down.

Do not support the machine on cinder blocks, hollow tiles, or props that may crumble under continuous load. Do not work under a machine that is supported solely by a jack. Follow recommended procedures in this manual.

When implements or attachments are used with a machine, always follow safety precautions listed in the implement or attachment operator's manual.

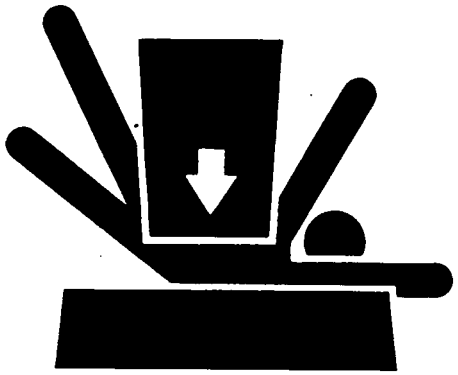

TS229 –UN–23AUG88

DX,LOWER –19–24FEB00–1/1

Operate Only from Operator's Seat

Avoid possible injury or machine damage. Do not start engine by shorting across starter terminals.

NEVER start engine while standing on ground. Start engine only from operator's seat.



T6607AO –UN–18OCT88

TX,05,FF1615 –19–14JUN90–1/1

9000
01
6

Stay Clear of Moving Parts

Entanglements in moving parts can cause serious injury.

To prevent accidents, use care when working around rotating parts.

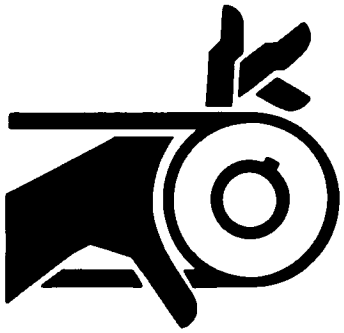

T7273AS –UN–08JUN90

TX,05,RR,572 –19–12JUN90–1/1

Avoid Power Lines

Serious injury or death can result from contact with electric lines.

Never move any part of the machine or load closer to electric line than 3 m (10 ft) plus twice the line insulator length.

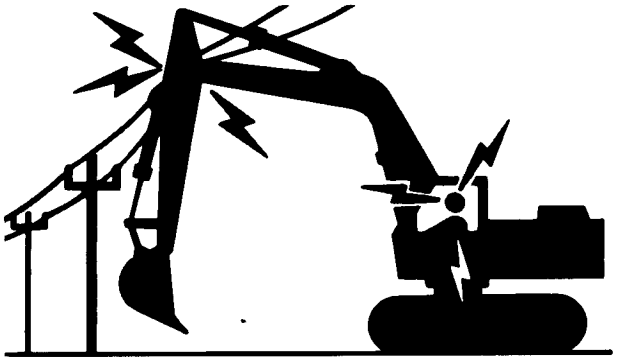

T7273AD –UN–08JUN90

TX,05,RR,594 –19–12JUN90–1/1

Use Handholds and Steps

Falling is one of the major causes of personal injury.

When you get on and off the machine, always maintain a three point contact with the steps and handrails and face the machine. Do not use any controls as handholds.

Never jump on or off the machine. Never mount or dismount a moving machine.

Be careful of slippery conditions on platforms, steps, and handrails when leaving the machine.



T6981AN –UN–15JUN89

TX,05,DH832 –19–16MAR92–1/1

Keep Riders Off Machine

Only allow the operator on the machine. Keep riders off.

Riders on machine are subject to injury such as being struck by foreign objects and being thrown off the machine. Riders also obstruct the operator's view resulting in the machine being operated in an unsafe manner.

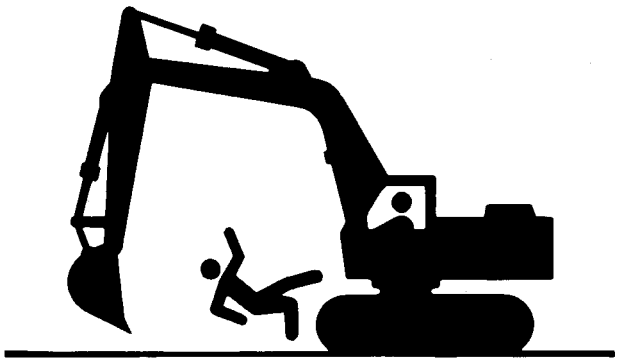

T7273AH –UN–08JUN90

TX,05,RR,560 –19–05OCT90–1/1

Move and Operate Machine Safely

Bystanders can be run over. Know the location of bystanders before moving, swinging, or operating the machine.

Always keep the travel alarm in working condition. It warns people when the machine starts to move.

Use a signal person when moving, swinging, or operating the machine in congested areas. Coordinate hand signals before starting the machine.

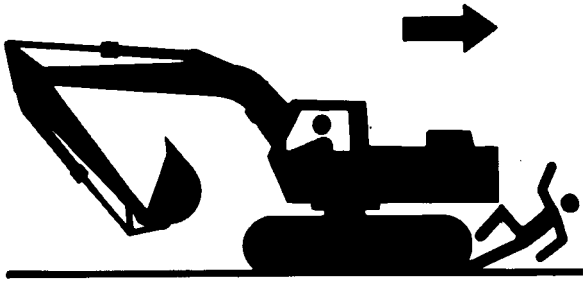

T7273AL –UN–08JUN90

TX,05,FF1806 –19–05OCT90–1/1

Wear Protective Clothing

Wear close fitting clothing and safety equipment appropriate to the job.

Operating equipment safely requires the full attention of the operator. Do not wear radio or music headphones while operating machine.

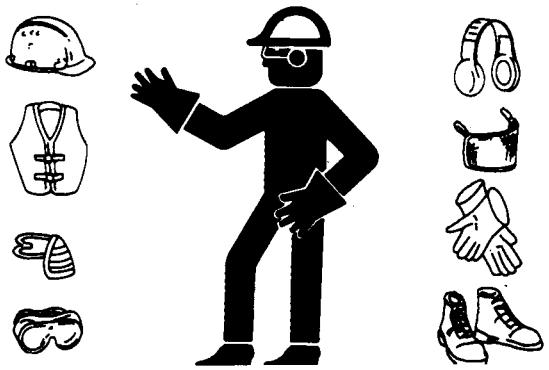

TS206 –UN–23AUG88

DX,WEAR2 –19–03MAR93–1/1

9000
01
8

Protect Against Flying Debris

Guard against injury from flying pieces of metal or debris; wear goggles or safety glasses.

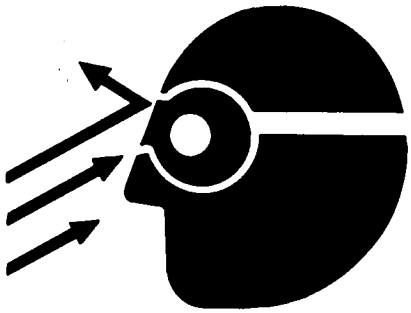

T6642DK –UN–18OCT88

TX,05,FF1613 –19–14JUN90–1/1

Protect Against Noise

Prolonged exposure to loud noise can cause impairment or loss of hearing.

Wear a suitable hearing protective device such as earmuffs or earplugs to protect against objectionable or uncomfortable loud noises.

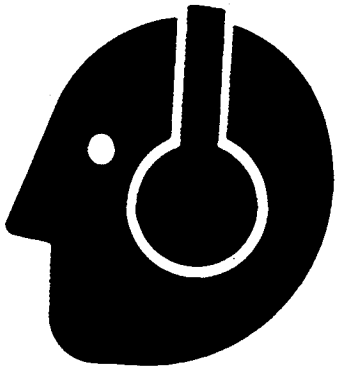

TS207 –UN–23AUG88

DX,NOISE –19–03MAR93–1/1

Illuminate Work Area Safely

Illuminate your work area adequately but safely. Use a portable safety light for working inside or under the machine. Make sure the bulb is enclosed by a wire cage. The hot filament of an accidentally broken bulb can ignite spilled fuel or oil.

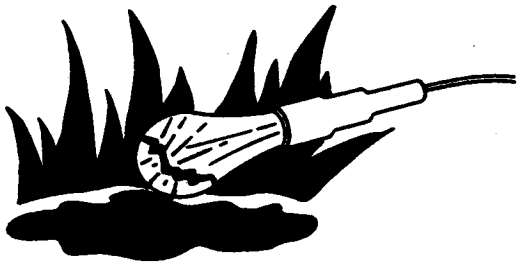

TS223 –UN–23AUG88

DX,LIGHT –19–04JUN90–1/1

Service Machines Safely

Tie long hair behind your head. Do not wear a necktie, scarf, loose clothing, or necklace when you work near machine tools or moving parts. If these items were to get caught, severe injury could result.

Remove rings and other jewelry to prevent electrical shorts and entanglement in moving parts.

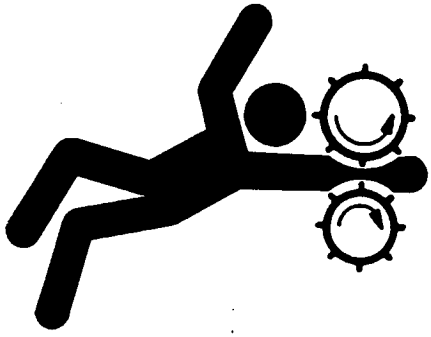

TS228 –UN–23AUG88

DX,LOOSE –19–04JUN90–1/1

Remove Paint Before Welding or Heating

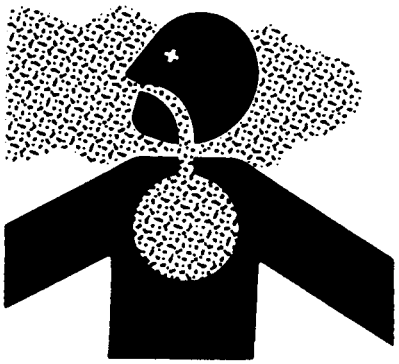

TS220 –UN–23AUG88

Avoid potentially toxic fumes and dust.

Hazardous fumes can be generated when paint is heated by welding, soldering, or using a torch.

Remove paint before heating:

- Remove paint a minimum of 76 mm (3 in.) from area to be affected by heating.
- If you sand or grind paint, avoid breathing the dust. Wear an approved respirator.
- If you use solvent or paint stripper, remove stripper with soap and water before welding. Remove solvent or paint stripper containers and other flammable material from area. Allow fumes to disperse at least 15 minutes before welding or heating.

Do all work in an area that is ventilated to carry toxic fumes and dust away.

Dispose of paint and solvent properly.

DX,PAINT –19–22OCT99–1/1

Avoid Heating Near Pressurized Fluid Lines



TS953 –UN–15MAY90

Flammable spray can be generated by heating near pressurized fluid lines, resulting in severe burns to yourself and bystanders. Do not heat by welding, soldering, or using a torch near pressurized fluid lines or other flammable materials. Pressurized lines can be accidentally cut when heat goes beyond the immediate flame area.

DX,TORCH –19–03MAR93–1/1

Beware of Exhaust Fumes



T6458AO –UN–18OCT88

Prevent asphyxiation. Engine exhaust fumes can cause sickness or death.

If you must operate in a building, be positive there is adequate ventilation. Either use an exhaust pipe extension to remove the exhaust fumes or open doors and windows to bring enough outside air into the area.

02T,05,J9 –19–07JAN91–1/1

9000
01
10

Use Proper Lifting Equipment

Lifting heavy components incorrectly can cause severe injury or machine damage.

Follow recommended procedure for removal and installation of components in the manual.

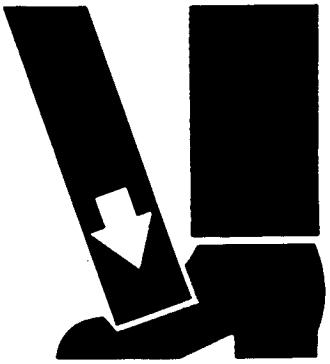

TS226 –UN–23AUG88

DX,LIFT –19–04JUN90–1/1

Service Cooling System Safely

Explosive release of fluids from pressurized cooling system can cause serious burns.

Shut off engine. Only remove filler cap when cool enough to touch with bare hands. Slowly loosen cap to first stop to relieve pressure before removing completely.



TS281 –UN–23AUG88

DX,RCAP –19–04JUN90–1/1

Dispose of Waste Properly

Improperly disposing of waste can threaten the environment and ecology. Potentially harmful waste used with John Deere equipment include such items as oil, fuel, coolant, brake fluid, filters, and batteries.

Use leakproof containers when draining fluids. Do not use food or beverage containers that may mislead someone into drinking from them.

Do not pour waste onto the ground, down a drain, or into any water source.

Air conditioning refrigerants escaping into the air can damage the Earth's atmosphere. Government regulations may require a certified air conditioning service center to recover and recycle used air conditioning refrigerants.

Inquire on the proper way to recycle or dispose of waste from your local environmental or recycling center, or from your John Deere dealer.

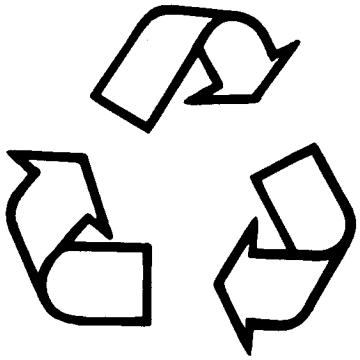

TS1133 –UN–26NOV90

DX,DRAIN –19–03MAR93–1/1

Work in a Clean Area

Before starting a job, clean the work area. Remove objects that may be a safety hazard to the mechanic or bystanders.

TX,05,FF1624 –19–14JUN90–1/1

Use Tools Properly

Use tools appropriate to the work. Makeshift tools, parts, and procedures can create safety hazards.

Use power tools only to loosen threaded tools and fasteners.

For loosening and tightening hardware, use the correct size tools. DO NOT use U.S. measurement tools on metric fasteners. Avoid bodily injury caused by slipping wrenches.

Use only recommended replacement parts. (See Parts Catalog.)



TS779 –UN–08NOV89

TX,05,FF1614 –19–14JUN90–1/1

Replace Safety Signs

Replace missing or damaged safety signs. See the machine operator's manual for correct safety sign placement.

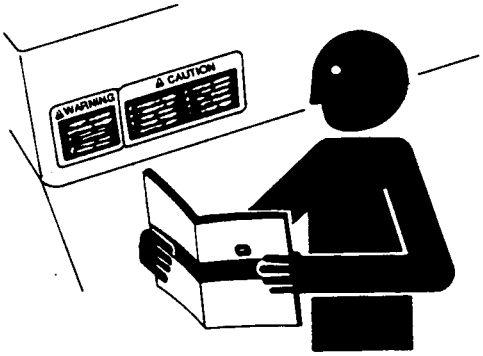

TS201 –UN–23AUG88

DX,SIGNS1 –19–04JUN90–1/1

9000
01
12

Live With Safety

Before returning machine to customer, make sure machine is functioning properly, especially the safety systems. Install all guards and shields.



TS231 –19–07OCT88

DX,LIVE –19–25SEP92–1/1

Excavator Overview

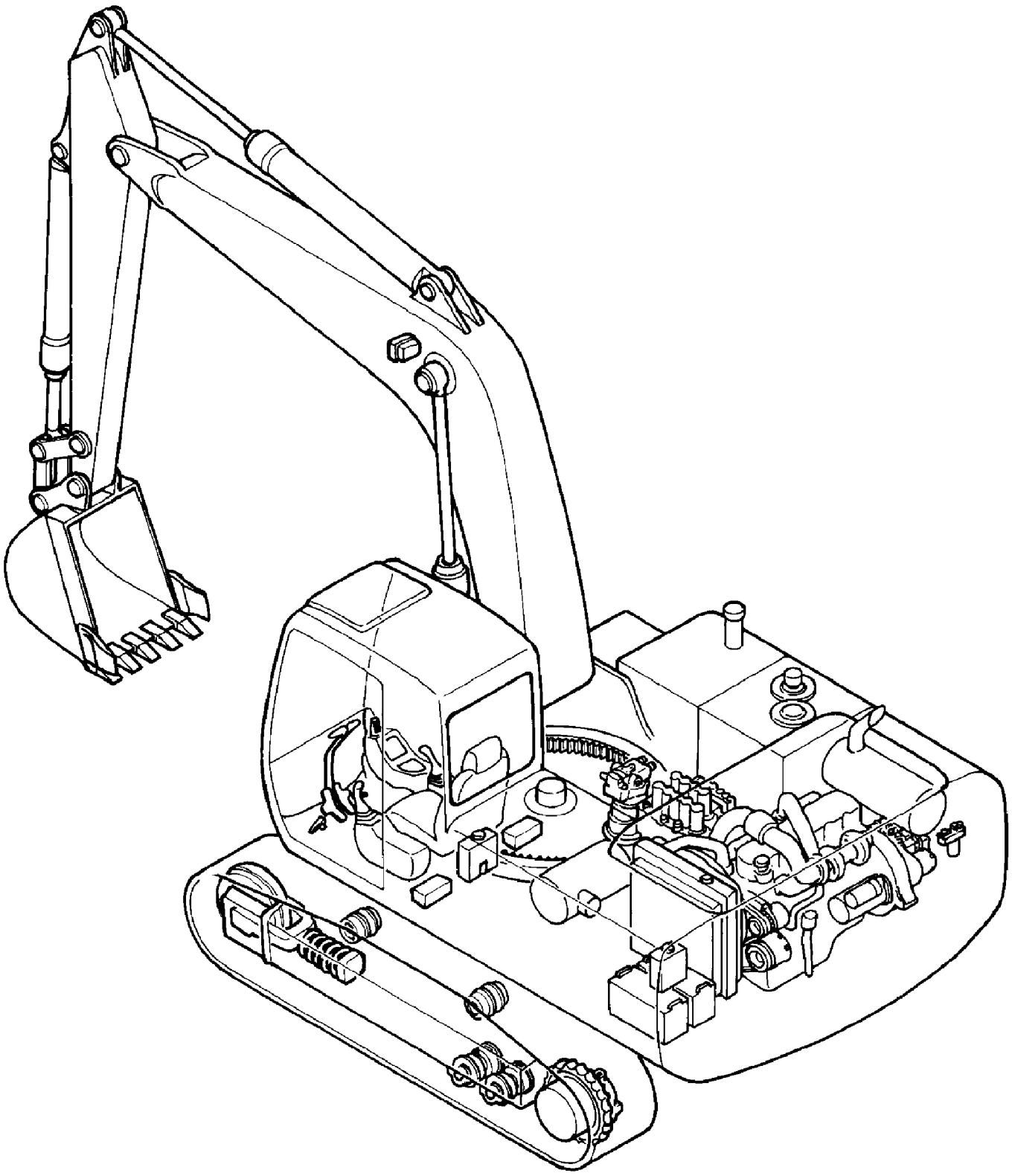

T115683

T115683 –UN–02JUN98

CED,TX08227,2993 –19–10FEB98–1/1

9000
02
2

200LC Specifications

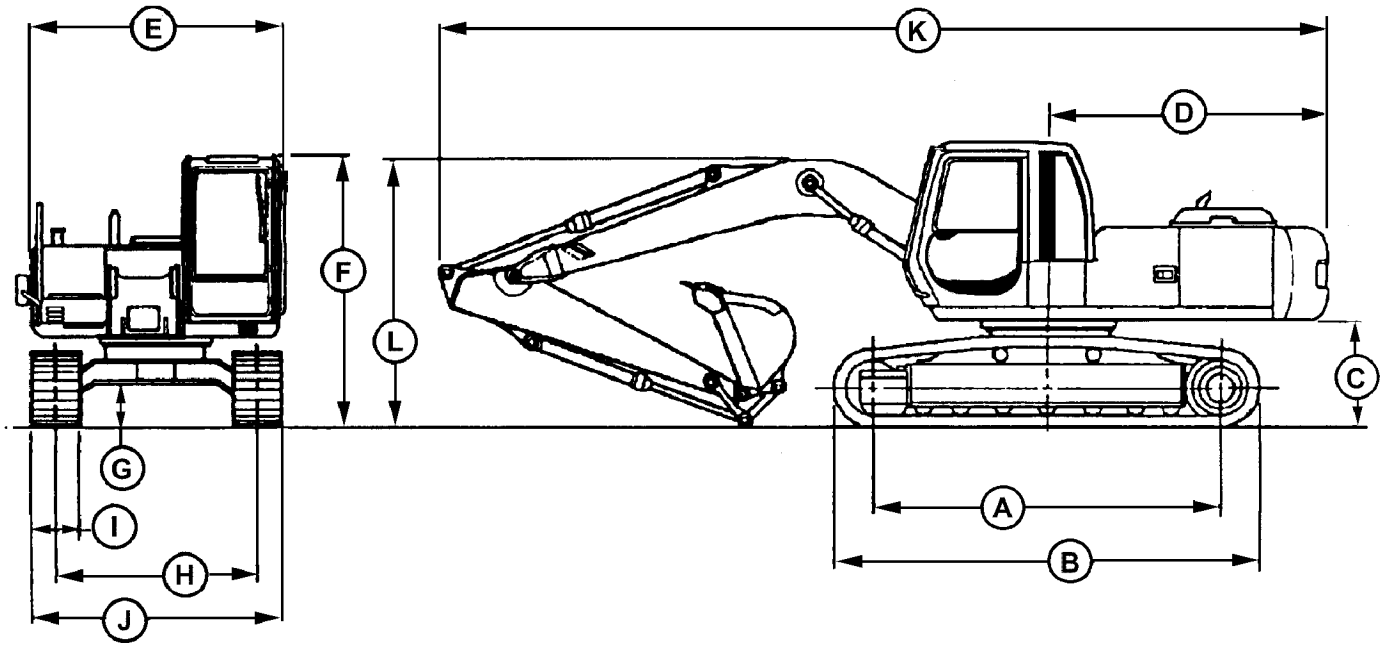

T113215 –UN–03FEB98

A—Sprocket Center To Idler Center
B—Undercarriage Length
C—Counterweight Clearance
D—Rear End Swing Radius
E—Overall Width
F—Cab Height
G—Minimum Ground Clearance
H—Center Of Sprocket To Center Of Sprocket
I—Track Shoe Width
J—Undercarriage Width
K—Overall Length
L—Transport Height

NOTE: Specifications and design subject to change without notice. Wherever applicable, specifications are in accordance with PCSA and SAE standards. Except where otherwise noted these specifications are based on a machine equipped with 800 mm (32 in.) shoes, counterweight, 2.91 m (9 ft 7 in.) arm, 723 kg (1590 lb) 0.86 m ^{3} (1.12 yd ^{3}) bucket, full fuel tank, 79 kg (175 lb) operator and standard equipment.

Item	Measurement	Specification
A—Sprocket Center To Idler Center	Distance	3660 mm (12 ft 0 in.)
B—Undercarriage	Length	4460 mm (14 ft 8 in.)
C—Counterweight Clearance	Distance	1030 mm (3 ft 5 in.)
D—Rear End Swing Radius	Distance	2720 mm (8 ft 11 in.)
E—Overall Width (Excluding Back Mirrors)	Distance	2720 mm (8 ft 11 in.)
F—Cab	Height	2720 mm (8 ft 11 in.)

Continued on next page

Item	Measurement	Specification
G—Minimum Ground Clearance	Distance	450 mm (1 ft 6 in.)
H—Center Of Sprocket To Center Of Sprocket	Distance	2390 mm (7 ft 10 in.)
I—Track Shoe	Width	600 mm (24 in.) or 700 mm (28 in.) or 800 mm (32 in.)
J—Undercarriage	Width	With 600 mm (24 in.) shoes: 2990 mm (9 ft 10 in.)
	Width	With 700 mm (28 in.) shoes: 3090 mm (10 ft 2 in.)
	Width	With 800 mm (32 in.) shoes: 3190 mm (10 ft 6 in.)
K—Machine	Overall Length	With 2220 mm (7 ft 3 in.) Arm: 9620 mm (31 ft 7 in.)
	Overall Length	With 2910 mm (9 ft 7 in.) Arm: 9500 mm (31 ft 2 in.)
L—Machine	Transport Height	With 2220 mm (7 ft 3 in.) Arm: 3090 mm (10 ft 2 in.)
	Transport Height	With 2910 mm (9 ft 7 in.) Arm: 2970 mm (9 ft 9 in.)
Machine	Operating Weight	20 298 kg (44,750 lb)

CED,TX14740,6954 –19–07SEP00–2/2

9000
02
4

200LC Working Ranges

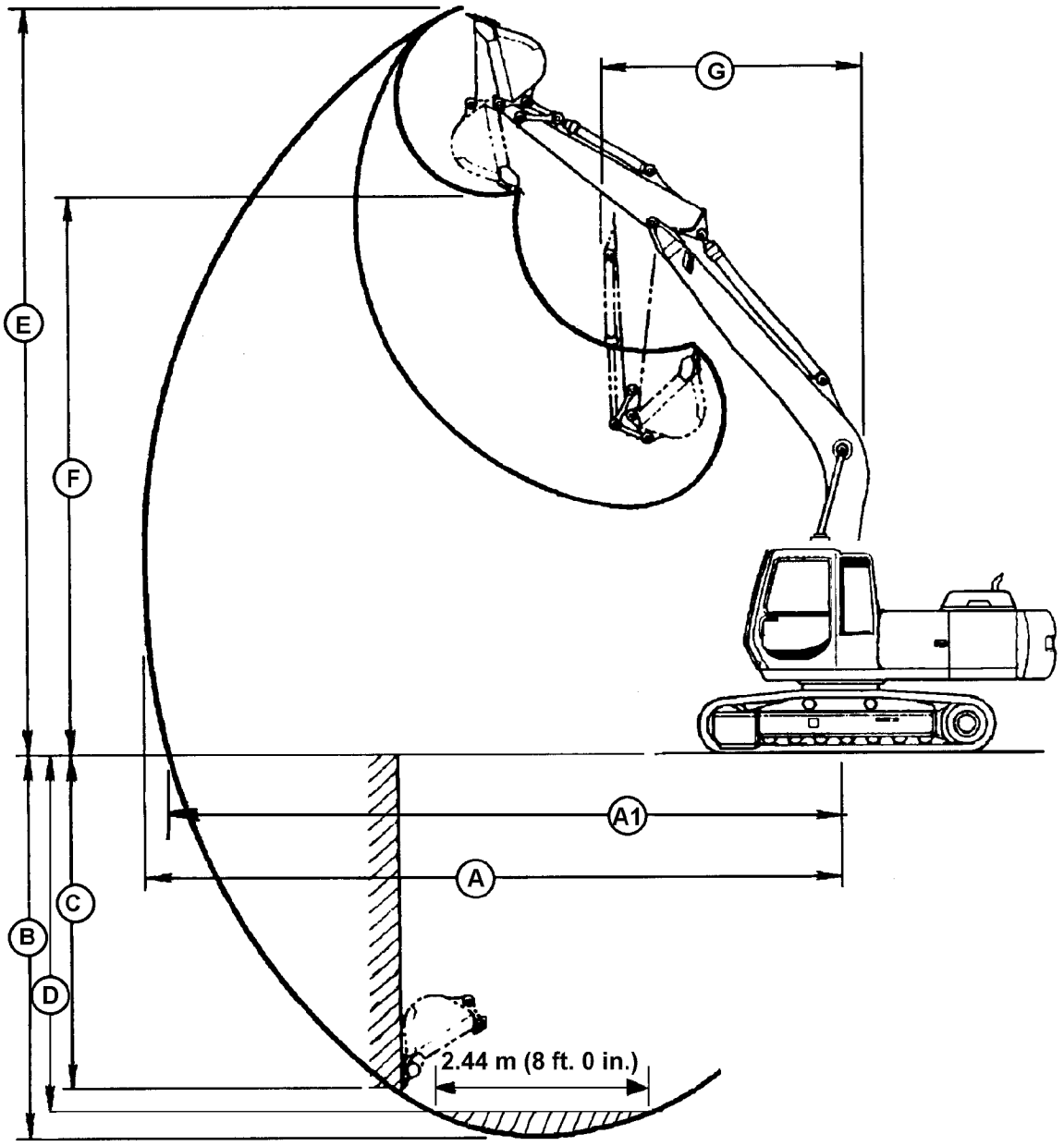

A—Maximum Digging Reach
A1—Maximum Digging Reach At Ground Level
B—Maximum Digging Depth
C—Maximum Vertical Wall
D—Maximum Digging Depth (Flat Bottom)
E—Maximum Cutting Height
F—Maximum Dumping Height
G—Minimum Swing Radius

Item	Measurement	Specification
A—Maximum Digging Reach	Distance	With 2220 mm (7 ft 3 in.) Arm: 9250 mm (30 ft 4 in.)
	Distance	With 2910 mm (9 ft 7 in.) Arm: 9910 mm (32 ft 6 in.)

Continued on next page
TX,115,DH5117 –19–15JUL96–1/2

Item	Measurement	Specification
A1—Maximum Digging Reach At Ground Level	Distance	With 2220 mm (7 ft 3 in.) Arm: 9080 mm (29 ft 9 in.)
	Distance	With 2910 mm (9 ft 7 in.) Arm: 9750 mm (32 ft 0 in.)
B—Maximum Digging Depth	Depth	With 2220 mm (7 ft 3 in.) Arm: 5980 mm (19 ft 7 in.)
	Depth	With 2910 mm (9 ft 7 in.) Arm: 6670 mm (21 ft 11 in.)
C—Maximum Vertical Wall	Depth	With 2220 mm (7 ft 3 in.) Arm: 5140 mm (16 ft 10 in.)
	Depth	With 2910 mm (9 ft 7 in.) Arm: 6050 mm (19 ft 10 in.)
D—Maximum Digging Depth (Flat Bottom)	Depth	With 2220 mm (7 ft 3 in.) Arm: 5740 mm (18 ft 10 in.)
	Depth	With 2910 mm (9 ft 7 in.) Arm: 6490 mm (21 ft 4 in.)
E—Maximum Cutting Height	Height	With 2220 mm (7 ft 3 in.) Arm: 9170 mm (30 ft 1 in.)
	Height	With 2910 mm (9 ft 7 in.) Arm: 9600 mm (31 ft 6 in.)
F—Maximum Dumping Height	Height	With 2220 mm (7 ft 3 in.) Arm: 6390 mm (21 ft 0 in.)
	Height	With 2910 mm (9 ft 7 in.) Arm: 6780 mm (22 ft 3 in.)
G—Minimum Swing Radius	Radius	With 2220 mm (7 ft 3 in.) Arm: 3540 mm (11 ft 7 in.)
	Radius	With 2910 mm (9 ft 7 in.) Arm: 3540 mm (11 ft 7 in.)

TX,115,DH5117 –19–15JUL96–2/2

9000
02
6

200LC Engine Specifications

Item	Measurement	Specification
John Deere POWERTECH® 6.8	Type	4-Stroke Cycle, Turbocharged, Aftercooled
	Bore And Stroke	106 x 127 mm (4.17 x 5.0 in.)
	Cylinders	6
	Displacement	6.785 L (414 cu in.)
	Net Torque @ 1300 RPM	579 N•m (427 lb-ft)
	Compression Ratio	17:1
	Power At 2150 RPM	104 kW (140 hp) Net SAE
	Lubrication	Pressure System With Full-Flow Filter
	Cooling Fan	Suction
	Electrical system	24 Volt
	Batteries (2) 12 volt	180 Minutes Reserve Capacity:

POWERTECH is a trademark of Deere & Company.

CED,TX14740,6956 –19–07SEP00–1/1

200LC Drain and Refill Capacities

Item	Measurement	Specification
Fuel Tank	Capacity	303 L (80 gal)
Cooling System	Capacity	28.4 L (7.5 gal)
Engine Oil	Capacity, Including Filter Change	19 L (5.0 gal)
Hydraulic System	Capacity	250 L (66 gal)
Hydraulic Tank	Capacity	130 L (34 gal)
Swing Gearbox	Capacity	4.7 L (5.0 qt)
Propel Gearbox (Each)	Capacity	5.2 L (5.5 qt)
Pump Drive Gearbox	Capacity	1.0 L (1.1 qt)

TX,115,DH5114 –19–15JUL96–1/1

Unified Inch Bolt and Cap Screw Torque Values

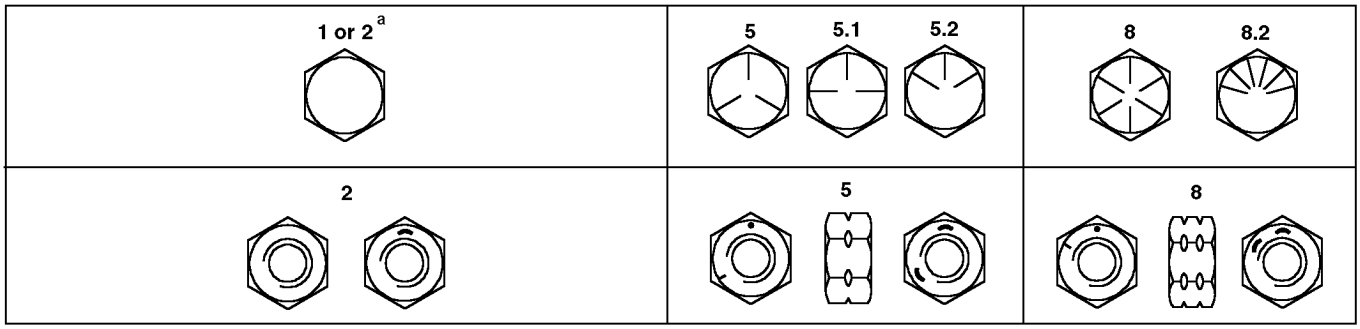

TORQ1A –UN–27SEP99

Top, SAE Grade and Head Markings; Bottom, SAE Grade and Nut Markings

	Grade 1 (No Mark)		Grade 2[a] (No Mark)		Grade 5, 5.1 or 5.2		Grade 8 or 8.2	
Size	**Lubricated[b] N·m(lb-ft)**	**Dry[c] N·m(lb-ft)**	**Lubricated[b] N·m(lb-ft)**	**Dry[c] N·m(lb-ft)**	**Lubricated[b] N·m(lb-ft)**	**Dry[c] N·m(lb-ft)**	**Lubricated[b] N·m(lb-ft)**	**Dry[c] N·m(lb-ft)**
1/4	3.8 (2.8)	4.7 (3.5)	6 (4.4)	7.5 (5.5)	9.5 (7)	12 (9)	13.5 (10)	17 (12.5)
5/16	7.7 (5.7)	9.8 (7.2)	12 (9)	15.5 (11.5)	19.5 (14.5)	25 (18.5)	28 (20.5)	35 (26)
3/8	13.5 (10)	17.5 (13)	22 (16)	27.5 (20)	35 (26)	44 (32.5)	49 (36)	63 (46)
7/16	22 (16)	28 (20.5)	35 (26)	44 (32.5)	56 (41)	70 (52)	80 (59)	100 (74)
1/2	34 (25)	42 (31)	53 (39)	67 (49)	85 (63)	110 (80)	120 (88)	155 (115)
9/16	48 (35.5)	60 (45)	76 (56)	95 (70)	125 (92)	155 (115)	175 (130)	220 (165)
5/8	67 (49)	85 (63)	105 (77)	135 (100)	170 (125)	215 (160)	240 (175)	305 (225)
3/4	120 (88)	150 (110)	190 (140)	240 (175)	300 (220)	380 (280)	425 (315)	540 (400)
7/8	190 (140)	240 (175)	190 (140)	240 (175)	490 (360)	615 (455)	690 (510)	870 (640)
1	285 (210)	360 (265)	285 (210)	360 (265)	730 (540)	920 (680)	1030 (760)	1300 (960)
1-1/8	400 (300)	510 (375)	400 (300)	510 (375)	910 (670)	1150 (850)	1450 (1075)	1850 (1350)
1-1/4	570 (420)	725 (535)	570 (420)	725 (535)	1280 (945)	1630 (1200)	2050 (1500)	2600 (1920)
1-3/8	750 (550)	950 (700)	750 (550)	950 (700)	1700 (1250)	2140 (1580)	2700 (2000)	3400 (2500)
1-1/2	990 (730)	1250 (930)	990 (730)	1250 (930)	2250 (1650)	2850 (2100)	3600 (2650)	4550 (3350)

[a] Grade 2 applies for hex cap screws (not hex bolts) up to 6 in. (152 mm) long. Grade 1 applies for hex cap screws over 6 in. (152 mm) long, and for all other types of bolts and screws of any length.

[b] "Lubricated" means coated with a lubricant such as engine oil, or fasteners with phosphate and oil coatings.

[c] "Dry" means plain or zinc plated without any lubrication.

DO NOT use these values if a different torque value or tightening procedure is given for a specific application. Torque values listed are for general use only. Check tightness of fasteners periodically.

Shear bolts are designed to fail under predetermined loads. Always replace shear bolts with identical grade.

Fasteners should be replaced with the same or higher grade. If higher grade fasteners are used, these should only be tightened to the strength of the original.

Make sure fastener threads are clean and that you properly start thread engagement. This will prevent them from failing when tightening.

Tighten plastic insert or crimped steel-type lock nuts to approximately 50 percent of the dry torque shown in the chart, applied to the nut, not to the bolt head. Tighten toothed or serrated-type lock nuts to the full torque value.

DX,TORQ1 –19–01OCT99–1/1

Metric Bolt and Cap Screw Torque Values

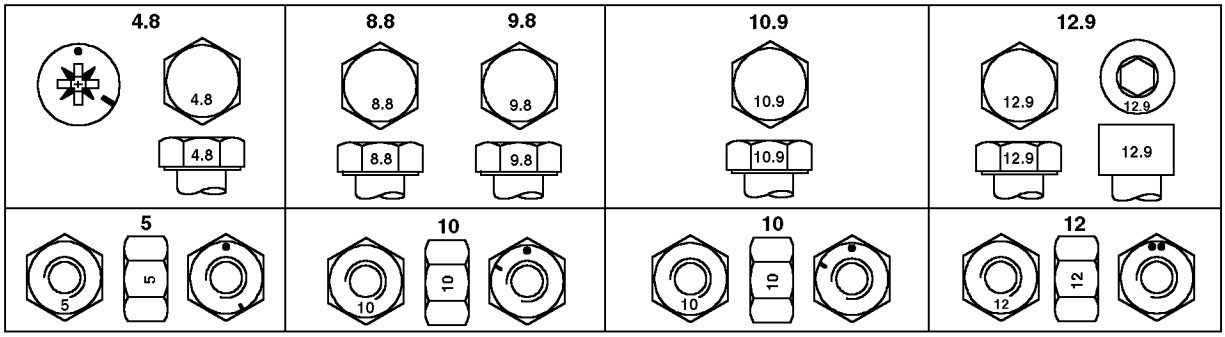

TORQ2 –UN–07SEP99

Top, Property Class and Head Markings; Bottom, Property Class and Nut Markings

	Class 4.8		Class 8.8 or 9.8		Class 10.9		Class 12.9	
Size	**Lubricated[a] N·m(lb-ft)**	**Dry[b] N·m(lb-ft)**	**Lubricated[a] N·m(lb-ft)**	**Dry[b] N·m(lb-ft)**	**Lubricated[a] N·m(lb-ft)**	**Dry[b] N·m(lb-ft)**	**Lubricated[a] N·m(lb-ft)**	**Dry[b] N·m(lb-ft)**
M6	4.7 (3.5)	6 (4.4)	9 (6.6)	11.5 (8.5)	13 (9.5)	16.5 (12.2)	15.5 (11.5)	19.5 (14.5)
M8	11.5 (8.5)	14.5 (10.7)	22 (16)	28 (20.5)	32 (23.5)	40 (29.5)	37 (27.5)	47 (35)
M10	23 (17)	29 (21)	43 (32)	55 (40)	63 (46)	80 (59)	75 (55)	95 (70)
M12	40 (29.5)	50 (37)	75 (55)	95 (70)	110 (80)	140 (105)	130 (95)	165 (120)
M14	63 (46)	80 (59)	120 (88)	150 (110)	175 (130)	220 (165)	205 (150)	260 (190)
M16	100 (74)	125 (92)	190 (140)	240 (175)	275 (200)	350 (255)	320 (235)	400 (300)
M18	135 (100)	170 (125)	265 (195)	330 (245)	375 (275)	475 (350)	440 (325)	560 (410)
M20	190 (140)	245 (180)	375 (275)	475 (350)	530 (390)	675 (500)	625 (460)	790 (580)
M22	265 (195)	330 (245)	510 (375)	650 (480)	725 (535)	920 (680)	850 (625)	1080 (800)
M24	330 (245)	425 (315)	650 (480)	820 (600)	920 (680)	1150 (850)	1080 (800)	1350 (1000)
M27	490 (360)	625 (460)	950 (700)	1200 (885)	1350 (1000)	1700 (1250)	1580 (1160)	2000 (1475)
M30	660 (490)	850 (625)	1290 (950)	1630 (1200)	1850 (1350)	2300 (1700)	2140 (1580)	2700 (2000)
M33	900 (665)	1150 (850)	1750 (1300)	2200 (1625)	2500 (1850)	3150 (2325)	2900 (2150)	3700 (2730)
M36	1150 (850)	1450 (1075)	2250 (1650)	2850 (2100)	3200 (2350)	4050 (3000)	3750 (2770)	4750 (3500)

[a] *"Lubricated" means coated with a lubricant such as engine oil, or fasteners with phosphate and oil coatings.*

[b] *"Dry" means plain or zinc plated without any lubrication.*

DO NOT use these values if a different torque value or tightening procedure is given for a specific application. Torque values listed are for general use only. Check tightness of fasteners periodically.

Shear bolts are designed to fail under predetermined loads. Always replace shear bolts with identical property class.

Fasteners should be replaced with the same or higher property class. If higher property class fasteners are used, these should only be tightened to the strength of the original.

Make sure fastener threads are clean and that you properly start thread engagement. This will prevent them from failing when tightening.

Tighten plastic insert or crimped steel-type lock nuts to approximately 50 percent of the dry torque shown in the chart, applied to the nut, not to the bolt head. Tighten toothed or serrated-type lock nuts to the full torque value.

DX,TORQ2 –19–01OCT99–1/1

Additional Metric Cap Screw Torque Values

CAUTION: Use only metric tools on metric hardware. Other tools may not fit properly. They may slip and cause injury.

Check tightness of cap screws periodically. Torque values listed are for general use only. Do not use these values if a different torque value or tightening procedure is listed for a specific application.

Shear bolts are designed to fail under predetermined loads. Always replace shear bolts with identical grade.

Fasteners should be replaced with the same or higher grade. If higher grade fasteners are used, these should only be tightened to the strength of the original.

Make sure fastener threads are clean and you properly start thread engagement. This will prevent them from failing when tightening.

Tighten cap screws having lock nuts to approximately 50 percent of amount shown in chart.

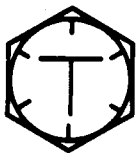

T6873AA

T6873AA –UN–18OCT88



T6873AB

T6873AB –UN–18OCT88



T6873AC

T6873AC –UN–18OCT88

Continued on next page

04T,90,M170 –19–29SEP99–1/2

METRIC CAP SCREW TORQUE VALUES[a]						
	T-Bolt		H-Bolt		M-Bolt	
Nominal Dia	N•m	lb-ft	N•m	lb-ft	N•m	lb-ft
8	29	21	20	15	10	7
10	63	46	45	33	20	15
12	108	80	88	65	34	25
14	176	130	137	101	54	40
16	265	195	206	152	78	58
18	392	289	294	217	118	87
20	539	398	392	289	167	125
22	735	542	539	398	216	159
24	931	687	686	506	274	202
27	1372	1012	1029	759	392	289
30	1911	1410	1421	1049	539	398
33	2548	1890	1911	1410	735	542
36	3136	2314	2401	1772	931	687

[a]Torque tolerance is ±10%.

04T,90,M170 –19–29SEP99–2/2