Propel Gearbox Disassemble and Assemble—35C ZTS

Disassemble Propel Gearbox

1. See Propel Gearbox Remove and Install—27C ZTS and 35C ZTS for gearbox and motor removal. (Group 0250.)

   See Propel Gearbox Operation for a cross-section of Propel Gearbox—35C ZTS. (Group 9020-05.)

2. ***CAUTION:***

   Heavy component; use a hoist.

Item	Measurement	Specification
Propel Gearbox—35C ZTS		
Propel Gearbox and Motor	Weight	44 kg (97 lb) approximate

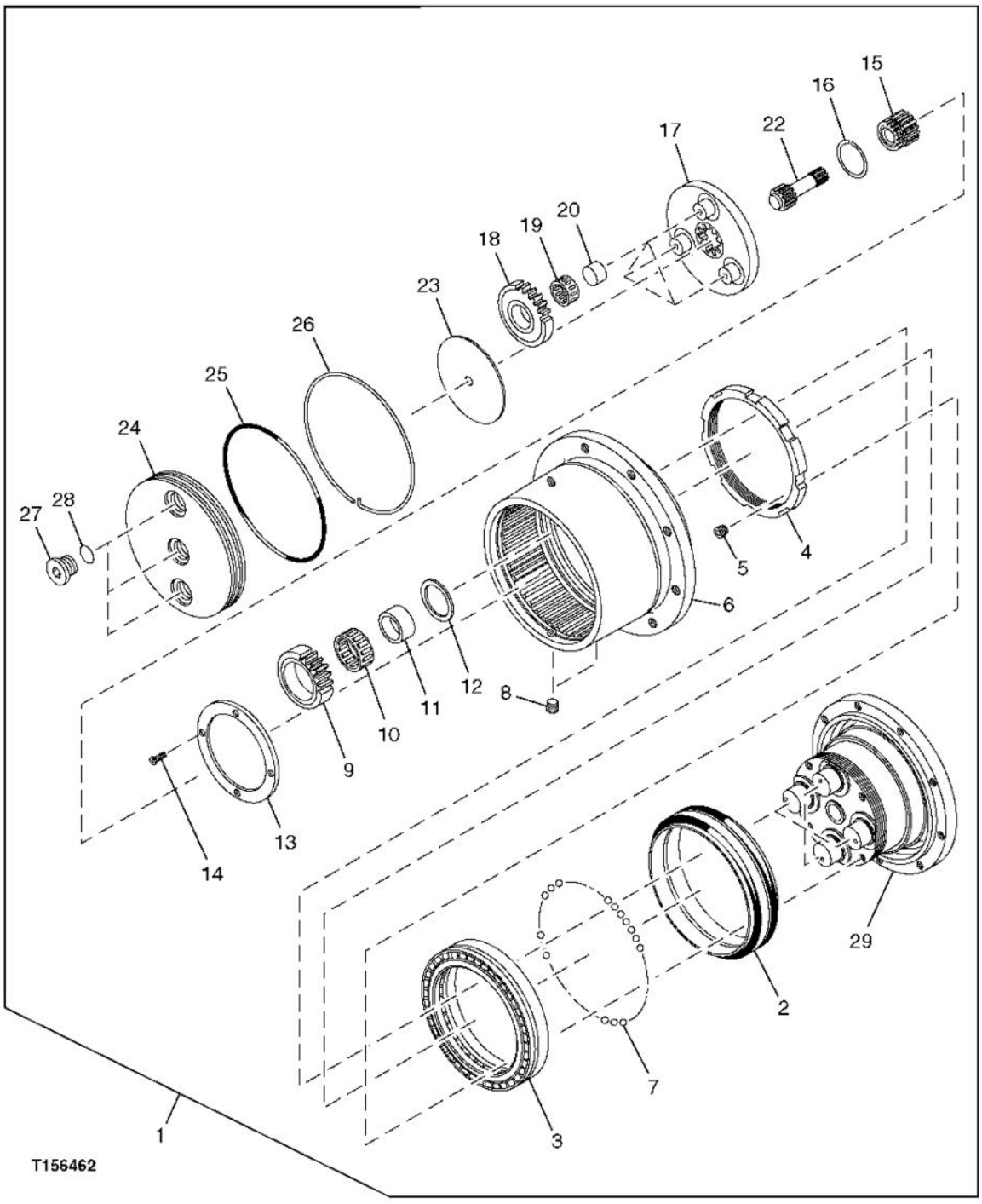

T156462-UN: Propel Gearbox Exploded View—35C ZTS

LEGEND:

1 - Propel Gearbox
2 - Metal Face Seal
3 - Bearing
4 - Bearing Nut (Retainer)
5 - Plug
6 - Ring Gear (Housing)
7 - Steel Ball (132 used)
8 - Pipe Plug (2 used)
9 - Second Planet Gear (4 used)
10 - Needle Bearing (4 used)
11 - Bearing Race (4 used)
12 - Thrust Washer (4 used)
13 - Thrust Washer
14 - Cap Screw
15 - Second Planet Sun Gear
16 - Snap Ring
17 - First Planet Carrier
18 - First Planet Gear (3 used)
19 - Needle Bearing (3 used)
20 - Bearing Race (3 used)
21 - Not Used
22 - Input Shaft and First Planet Sun Gear

23 - Thrust Washer
24 - Cover
25 - O-Ring
26 - Wire (Retainer)
27 - Plug (3 used)
28 - O-Ring
29 - Propel Motor Housing and Second Planet Carrier

Remove plugs (27) and O-rings (28) to drain oil. Approximate capacity is 0.5 L (0.5 qt).

3. Remove pipe plug (8) located on the side of ring gear at cover end.

---

4. 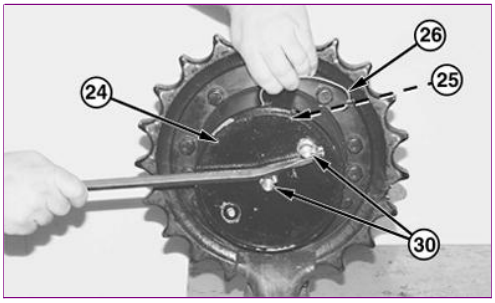

T163455-UN: Cover-to-Ring Gear Wire (Retainer)

LEGEND:

24 - Cover
25 - O-Ring
26 - Wire (Retainer)
30 - Fitting (2 used)

Install fittings (30) into holes.

5. Turn cover (24) until the end of wire (26) is visible through hole. Continue turning the cover, pulling the wire out through the hole.
6. Remove cover and O-ring (25).
7. Remove thrust plate (23).

---

8. ***CAUTION:***

Planet gears can turn. Keep fingers away from gears.

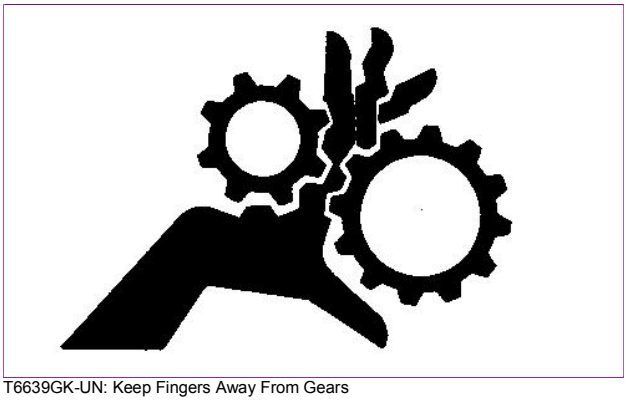
T6639GK-UN: Keep Fingers Away From Gears

Remove input shaft (22).

Remove parts for first planet carrier and gears (17—20), second planet sun gear (15), and second planet gears (9—14). Keep parts for each planet gear together.

9. Remove the sprocket.
10. Remove pipe plug (8) located on the side of ring gear adjacent to the sprocket mounting flange.

Remove the 132 steel balls (7) through the hole.

11. Push the housing (29) and bearing (3) out of ring gear using a shop press or three M12 x 1.75 cap screws installed in the sprocket mounting flange and tighten against the housing. To protect the housing, use steel plates between the end of cap screws and housing.
12. **IMPORTANT:**

Metal face seals can be reused if they are not worn or damaged. A used seal must be kept together as a set because of wear patterns on seal ring face.

Remove the metal face seals (2) from ring gear and housing. Keep seal rings together as a matched set with a piece of clean cardboard between them to protect the seal ring face.

See Inspect Metal Face Seals to determine if seals can be reused. (Group 0130.)

13. Remove plugs (5). Remove bearing nut (4) using a spanner wrench or ST3313 Special Tool.
14. Remove bearing (3) from housing for replacement only. Bearing is a press fit.

NOTE:

A new bearing should be installed if removed.

15. See Propel Motor Disassemble and Assemble—35C ZTS for motor disassembly. (Group 0260.)

Assemble Propel Gearbox

1. See Propel Gearbox Operation for a cross-section of Propel Gearbox—35C ZTS. (Group 9020-05.)

   See Propel Motor Disassemble and Assemble—35C ZTS for motor assembly. (Group 0260.)

---

2. 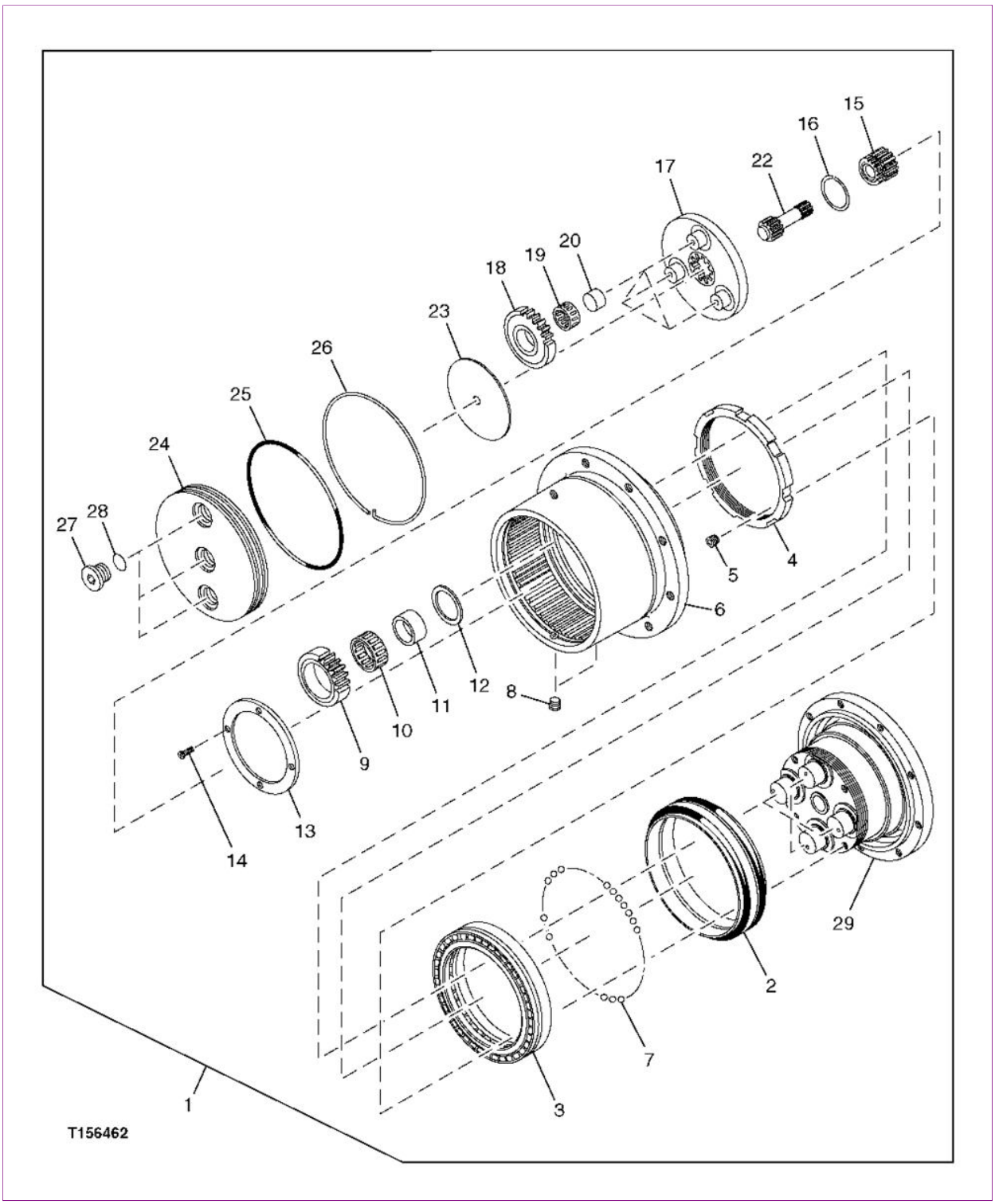

   T156462-UN: Propel Gearbox Exploded View—35C ZTS

   LEGEND:

   1 - Propel Gearbox
   2 - Metal Face Seal
   3 - Bearing
   4 - Bearing Nut (Retainer)
   5 - Plug

6 - Ring Gear (Housing)
7 - Steel Ball (132 used)
8 - Pipe Plug (2 used)
9 - Second Planet Gear (4 used)
10 - Needle Bearing (4 used)
11 - Bearing Race (4 used)
12 - Thrust Washer (4 used)
13 - Thrust Washer
14 - Cap Screw
15 - Second Planet Sun Gear
16 - Snap Ring
17 - First Planet Carrier
18 - First Planet Gear (3 used)
19 - Needle Bearing (3 used)
20 - Bearing Race (3 used)
21 - Not Used
22 - Input Shaft and First Planet Sun Gear
23 - Thrust Washer
24 - Cover
25 - O-Ring
26 - Wire (Retainer)
27 - Plug (3 used)
28 - O-Ring
29 - Propel Motor Housing and Second Planet Carrier

Install bearing (3) so the thicker edge of outer race is towards the threaded end of housing (29).

3. Tighten bearing nut (4) to specifications using spanner wrench or ST3313 Special Tool.

Item	Measurement	Specification
Propel Gearbox—35C ZTS		
Bearing-to-Housing Bearing Nut	Torque	196 ±10 N˙m (144 ± 7.2 lb-ft)

4. Tighten plug (5) to specification.

Item	Measurement	Specification
Propel Gearbox—35C ZTS		
Bearing Nut-to-Housing Plug	Torque	14.7 N˙m (132 lb-in.)

5. **IMPORTANT:**

   The metal face seal O-rings and their seat surfaces must be clean, dry, and oil free so the O-rings do not slip.

Thoroughly clean O-rings, seat surfaces in housing (29), ring gear (6), and seal rings using volatile, non-petroleum base solvent and lint-free tissues.

6. Install O-rings on seal rings. Check that O-ring is not twisted.

7. *NOTE:*

   A volatile, non-petroleum base solvent or talcum powder can be used as a lubricant. Solvent must not damage the O-ring or leave an oil residue.

Apply equal pressure with fingers at four equally spaced points on seal ring face. Seal must “pop” down into place so O-ring is tight against seal bore and seal ring is installed squarely.

8. Wipe finger prints and foreign material off seal ring face using clean oil and lint-free tissues.
9. Apply a thin film of clean oil on each seal ring face.
10. Install ring gear onto bearing and housing. Tap around the top edge of ring gear using a soft-faced hammer to seat the ring gear on bearing.
11. Install the 132 steel balls (7) through hole and into the groove in bearing and ring gear.
12. Apply pipe sealant to threads of pipe plug (8). Tighten plug to specification.

Item	Measurement	Specification
Propel Gearbox—35C ZTS		
Pipe Plug to Ring Gear	Torque	7.9 N˙m (70 lb-in.)

13. Install thrust plates (12), races (11), needle bearings (10), and second planet gears (9) onto pins.
14. Install thrust washer (13).

Apply thread lock and sealer (low strength) to threads of cap screw (14). Tighten cap screws to specifications.

Item	Measurement	Specification
Propel Gearbox—35C ZTS		
Thrust Washer-to-Housing Cap Screw	Torque	6.1 N˙m (54 lb-in.)

15. Install snap ring (16) on second planet sun gear (15). Install sun gear.
16. Install races (20) and needle bearings (19).
17. Install first planet gears (18) so the flat side is against machined surface of first planet carrier (17).
18. Install input shaft (22).
19. Install thrust plate (23).
20. Install O-ring (25) on cover (24). Apply grease to O-ring.

21. 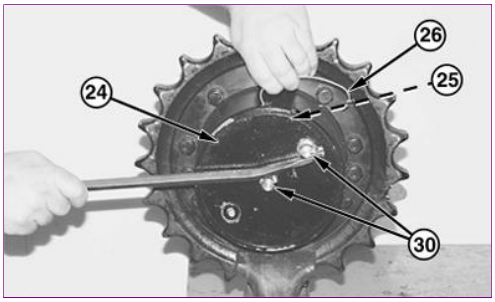

T163455-UN: Cover-to-Ring Gear Wire (Retainer)

LEGEND:

24 - Cover
25 - O-Ring
26 - Wire (Retainer)
30 - Fitting (2 used)

Install cover. Install fittings (30).

22. Bend end of wire (26) to 90° approximately 6 mm (0.24 in.) from end.
23. Push wire through hole and into groove in cover and ring gear.
24. Turn cover to pull remaining wire into the groove.
25. Apply pipe sealant to threads of pipe plug (8). Tighten plug.

Item	Measurement	Specification
Propel Gearbox—35C ZTS		
Pipe Plug to Ring Gear	Torque	7.9 N˙m (70 lb-in.)

26. Remove fittings.
27. Add approximately 0.5 L (0.5 qt) of gear oil to gearbox. See Propel Gearbox Oil for specification. (Operator's Manual.)

    See Check Propel Gearbox Oil Level after plugs and O-rings (27 and 28) are installed. (Operator's Manual.)
28. Tighten plugs to specification.

Item	Measurement	Specification
Propel Gearbox—35C ZTS		
Plug to Cover	Torque	34 N˙m (25 lb-ft)

LOCTITE is a trademark of Loctite Corp.

Propel Motor Disassemble and Assemble—27C ZTS

Disassemble Propel Motor

1.

CAUTION:

Heavy component; use a hoist.

Item	Measurement	Specification
Propel Motor—27C ZTS		
Propel Gearbox and Motor	Weight	44 kg (97 lb) approximate

See Propel Gearbox Remove and Install—27C ZTS and 35C ZTS for gearbox and motor removal. (Group 0250.)

See Propel Gearbox Disassemble and Assemble—27C ZTS for gearbox disassembly. (Group 0250.)

See Propel Motor and Brake Valve Housing Operation for a cross-section of Propel Motor and Brake Valve Housing—27C ZTS. (Group 9025-05.)

2.

CAUTION:

Brake valve housing contains springs under load. Prevent injury from sudden release by loosing cap screws evenly.

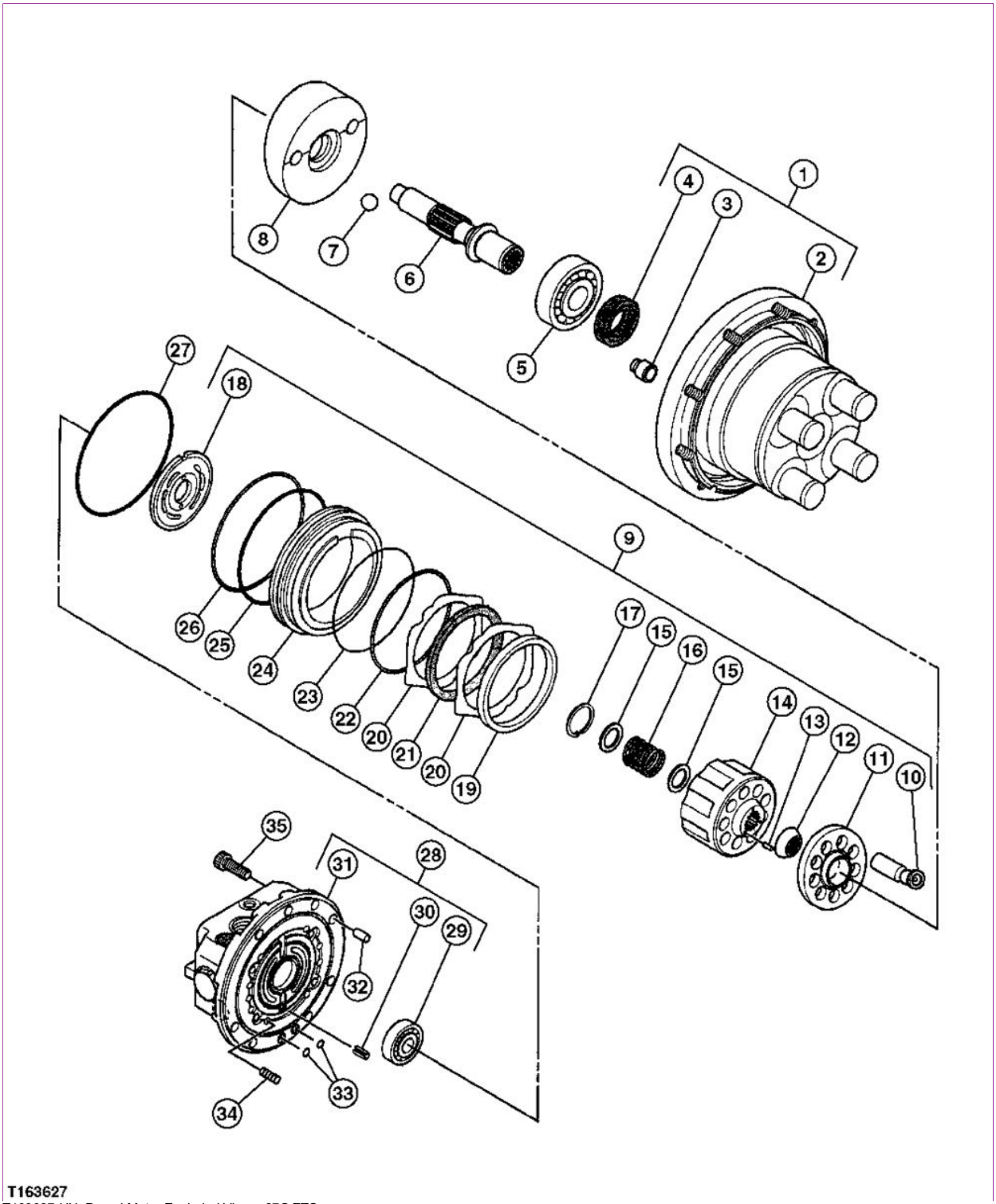

T163627-UN: Propel Motor Exploded View—27C ZTS

LEGEND:

1 - Housing Kit
2 - Propel Motor Housing and Second Planet Carrier
3 - Control Piston
4 - Oil Seal
5 - Ball Bearing
6 - Drive Shaft
7 - Pivot Ball (2 used)
8 - Swash Plate
9 - Rotary Group Kit
10 - Piston and Shoe (9 used)
11 - Retainer (Holder)
12 - Ball Guide (Holder)
13 - Pin (3 used)
14 - Cylinder Block
15 - Retainer (2 used)
16 - Spring
17 - Snap Ring
18 - Valve Plate
19 - Spacer
20 - Plate (2 used)
21 - Disk
22 - Backup Ring

23 - O-Ring
24 - Park Brake Piston
25 - O-Ring
26 - Backup Ring
27 - O-Ring
28 - Brake Valve Housing Kit
29 - Ball Bearing
30 - Spring Pin
31 - Brake Valve Housing
32 - Dowel Pin
33 - O-Ring (2 used)
34 - Park Brake Spring (8 used)
35 - Cap Screw (7 used)

Loosen cap screws (35) evenly to release force of park brake springs (34).

3. Before removing the brake valve housing (31), measure and record the distance between it and motor housings as a reference for assembly.

4. **IMPORTANT:**

   Valve plate can stick to the brake valve housing. Dropping the valve plate can damage the highly machined surfaces. Use care when removing the brake valve housing.

   Remove brake valve housing being careful not to drop the valve plate (18).

   Protect machined surfaces of valve plate from damage.

5. Remove ball bearing (29) from brake valve housing only if replacement is necessary. Bearing is press fit. If removed, install new bearings.

6. Remove park brake piston (24).

7. Hold the housing in a horizontal position and then slid the rotary group (10—17) out of housing and off the drive shaft.

8. ***CAUTION:***

   Cylinder block contains a springs under load. Prevent injury from sudden release by using a press to compress the spring before removing snap ring.

   Disassemble rotary group for inspection and cleaning only. Rotary group is serviced as an assembly.

   Compress spring (16) using a press before removing the snap ring (21).

9. 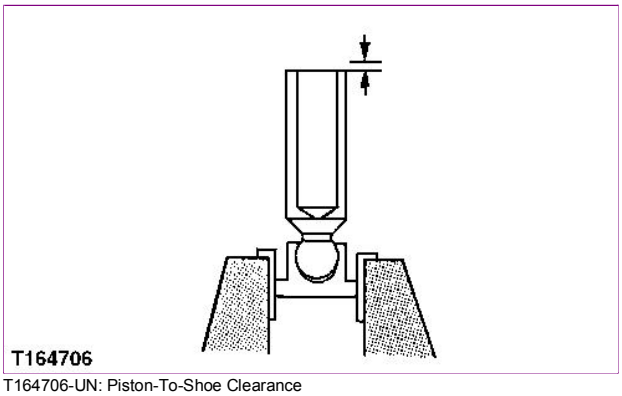

T164706-UN: Piston-To-Shoe Clearance

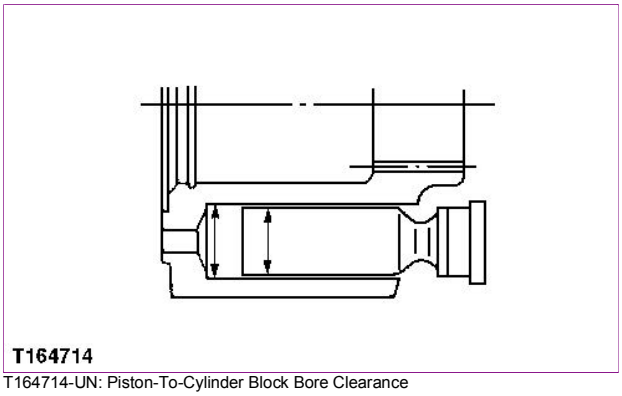

T164714-UN: Piston-To-Cylinder Block Bore Clearance

Check the clearance between piston and shoe.

Item	Measurement	Specification
Propel Motor—27C ZTS		
Piston to Shoe	Clearance	0.4 mm (0.0157 in.) or less

10. Substract piston diameter from cylinder block bore diameter to check for wear.

Item	Measurement	Specification

Propel Motor—27C ZTS

Piston to Cylinder Block Bore	Clearance	0.04 mm (0.00157 in.) or less

11. 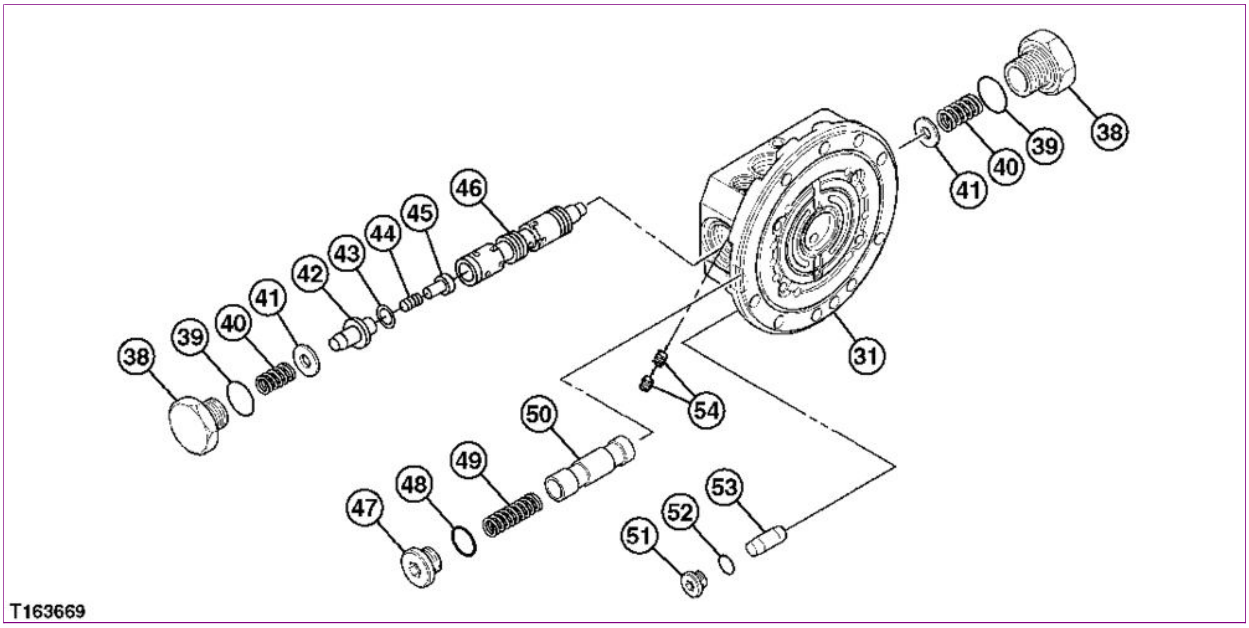

T163669-UN: Brake Valve Housing Exploded View—27C ZTS

LEGEND:

31 - Brake Valve Housing
38 - Plug (2 used)
39 - O-Ring (2 used)
40 - Spring (2 used)
41 - Washer (2 used)
42 - Guide (2 used)
43 - O-Ring (2 used)
44 - Spring (2 used)
45 - Check Valve (2 used)
46 - Counterbalance Valve Spool
47 - Plug (2 used)
48 - O-Ring (2 used)
49 - Spring
50 - Propel Speed Change Valve Spool
51 - Plug (2 used)
52 - O-Ring (2 used)
53 - Shuttle Valve Spool
54 - Counterbalance Valve Orifice (4 used)

Brake valve housing (31) is serviced as an assembly except the O-rings (39, 43, 48, and 52) and springs (8 and 9). Disassemble for inspection and cleaning only.

12. Apply clean hydraulic oil to all machined surfaces after cleaning.

Assemble Propel Motor

1. See Propel Motor and Brake Valve Housing Operation for a cross-section of Propel Motor and Brake Valve Housing—27C ZTS. (Group 9025-05.)

   See Propel Gearbox Disassemble and Assemble—27C ZTS for gearbox assembly. (Group 0250.)

Click on the image link below for the full version of the service manual

