SERVICE MANUAL

INTERNATIONAL® DT 466E, 530E, 466, 530, and HT 530

DIESEL ENGINE

Model Year 2000 and Up

EGES-210-1

© 2006 International Truck and Engine Corporation

Printed in the United States of America

SERVICE MANUAL

INTERNATIONAL® DT 466E, 530E, 466, 530, and HT 530 DIESEL ENGINE

EGES-210-1

Model Year 2000 and Up


BUY NOW
PayPal
VISA
MasterCard
DISCOVER
AMERICAN EXPRESS

Table of Contents

Foreword.....1

Service Diagnosis.....2

Safety Information.....3

Introduction.....5

Mounting Engine on Stand.....33

Turbochargers.....39

Manifolds.....59

Cylinder Head and Valves.....69

Rocker Arm Assembly, Camshaft Assembly, Tappets, and Push Rods.....113

Power Cylinders.....133

Vibration Damper, Crankshaft, Main Bearings, Flywheel, and Crankcase.....165

Timing Gear Train and Front Cover.....221

Lubricating Oil Pump, Oil Filter, and Cooler.....243

Water Pump and Thermostat.....259

Engine Electrical.....277

High-pressure Lube Oil System.....299

Fuel System.....309

Terminology.....319

Specifications.....327

Torque Information.....341

Special Tools.....351

Read all safety instructions in the "Safety Information" section of this manual before doing any procedures.
Follow all warnings, cautions, and notes.
©2006 International Truck and Engine Corporation

Read all safety instructions in the "Safety Information" section of this manual before doing any procedures.
Follow all warnings, cautions, and notes.
©2006 International Truck and Engine Corporation

Foreword

This manual is part of a series of publications intended to assist service technicians in maintaining International® diesel engines.

Due to a commitment of continuous research and development, some procedures, specifications, and parts may be altered to improve International® products and introduce technological advances.

Periodic revisions may be made to these publications and mailed automatically to “Revision Service” subscribers. When ordering publications, the latest revision will be supplied.

NOTE: International® diesel engines are installed in many different applications. It is not always possible to illustrate the exact surroundings of the working area in photographs.

When ordering additional copies of this publication or any other International Truck and Engine Corporation publication, refer to the following contact information:

International Truck and Engine Corporation

Printing and Distribution Services

C/O Moore Wallace North America

1750 Wallace Avenue

St. Charles, IL 60174

Telephone: 630-313-7507

Technical Service Literature

1171734R7	DT 466E, 1999, 2003 Model Year *Operations and Maintenance Manual*
1171735R5	International 530E, 1999-2003 Model Year *Operations and Maintenance Manual*
EGES 210-1	*Engine Service Manual*
EGES 175-1	*Diagnostic Manual*
EGES 180-1	Hard Starting No Starting Diagnostic Form
EGED 185-1	Electronic Control System Diagnostic Form

Read all safety instructions in the "Safety Information" section of this manual before doing any procedures.
Follow all warnings, cautions, and notes.
©2006 International Truck and Engine Corporation

Service Diagnosis

Service diagnosis is an investigative procedure that must be followed to locate and correct an engine problem.

The engine is first considered as a complete unit. If it is determined that the problem is application related, see application specific manuals for further diagnostic information.

If the problem is determined to be within the engine, the problem can then be localized to components or systems. Testing procedures will then help analyze the source of the problem.

Prerequisites for effective diagnosis:

- Knowledge of the principles of operation for both engine and application systems.
- Knowledge to perform and understand all procedures in the diagnostic and service publications.
- Availability of and the ability to use diagnostic test equipment, such as gauges.
- Availability of the most current information for the engine application.

Effective service diagnosis requires use of the following references:

- *Engine Service Manual*
- *Engine Diagnostic Manual*
- Diagnostics Forms
- Electronic Control Systems Diagnostics Forms
- Technical Service Information (TSI) letters
- Technical Services Frequently Asked Questions (FAQ)

NOTE: Metric values precede English values for test procedures and reference.

Examples: 96 kPa (14 psi), 20 °C (68 °F)

Read all safety instructions in the "Safety Information" section of this manual before doing any procedures.
Follow all warnings, cautions, and notes.
©2006 International Truck and Engine Corporation

Safety Information

This manual provides general and specific service procedures essential for reliable engine operation and your safety. Since many variations in procedures, tools, and service parts are involved, advice for all possible safety conditions and hazards cannot be stated.

Disregard for warnings, cautions, and instructions can lead to injury, death, or damage to the engine or vehicle.

Read safety instructions before doing any service and test procedures for the engine or vehicle. See related application manuals for more information.

Most accidents that involve operation, maintenance, and repair are caused by failure to observe basic safety rules or precautions. Read and follow OSHA regulations.

SAFETY TERMINOLOGY

Three terms are used to stress your safety and safe operation of the engine: Warning, Caution, and Note

Warning: Signals conditions, hazards, and unsafe practices that can cause injury or death

Caution: Signals conditions and practices that can cause damage to the engine or vehicle

Note: Signals a key point or procedure that must be followed for correct, efficient engine operation.

SAFETY INSTRUCTIONS

Vehicle

- Make sure the vehicle is in neutral or park, the parking brake is set, and the wheels are blocked before doing any work or diagnostic procedures on the engine or vehicle.

Work area

The engine and its components must be kept clean during service or maintenance. Contamination of the engine or components will cause premature wear.

- Keep work area clean, dry, and organized.
- Keep tools and parts off the floor.
- Make sure the work area is ventilated and well lit.
- Make sure a First Aid Kit is available.

Safety equipment

- Use correct lifting devices.
- Use safety blocks and stands.

Protective measures

- Wear appropriate protective apparel when working with or around hot liquid, hot engines, or hot engine components
- Wear protective glasses and safety shoes (do not work in bare feet, sandals, or sneakers)
- Wear appropriate hearing protection
- Wear correct work clothing.
- Do not wear rings, watches, or other jewelry.
- Restrain long hair.

Fire prevention

- Make sure charged fire extinguishers are in the work area.
- To prevent fire and hazardous fumes, clean and wipe dry all engine surfaces where fluids may have spilled.

NOTE: Check the classification of each fire extinguisher to ensure that the following fire types can be extinguished.

1. Type A - Wood, paper, textiles, and rubbish
2. Type B - Flammable liquids
3. Type C - Electrical equipment

Batteries

Batteries produce highly flammable gas during and after charging.

- Always disconnect the main negative battery cable first.
- Always connect the main negative battery cable last.
- Avoid leaning over batteries.
- Use suitable eye protection.
- Do not expose batteries to open flames or sparks.
- Do not smoke in workplace.

©2006 International Truck and Engine Corporation

Compressed air

- Limit shop air pressure for blow gun to 207 kPa (30 psi).
- Use approved equipment.
- Do not direct air at body or clothing.
- Wear safety glasses or goggles.
- Wear hearing protection
- Use shielding to protect others in the work area.

Tools

- Make sure all tools are in good condition.
- Make sure all standard electrical tools are grounded.
- Check for frayed power cords before using power tools, lights, or extension cords.

Fluids under pressure

- Use extreme caution when working on systems under pressure.
- Follow approved procedures only.

Fuel

- Do not over fill the fuel tank. Over fill creates a fire hazard.
- Do not smoke in the work area.
- Do not fuel the tank when the engine is running.

Removal of tools, parts, and equipment

- Reinstall all safety guards, shields, and covers after servicing the engine.
- Make sure all tools, parts, and service equipment are removed from the engine and vehicle after all work is done.

©2006 International Truck and Engine Corporation

Table of Contents

Component Location.....7
- **Front View**.....7
- **Left View**.....8
- **Rear View**.....9
- **Right View**.....10

Engine Identification.....11
- **Engine Serial Numbers**.....11
- **Engine Serial Number Chart**.....12

Engine Component Identification.....13
- **Turbocharger (Non-Wastegate)**.....13
- **Turbocharger (Wastegate)**.....14

Features.....15
- **General Features**.....15

Chassis Features.....16
- **Chassis-Mounted Charge Air Cooler**.....16

Cooling System.....17
- **Description**.....17
- **Thermostat Operation** 18

Lubrication System.....19
- **Description**.....20
- **Location**.....20
- **Oil Flow**.....20
- **Oil Pressure Regulator Valve and Oil Pressure Relief Valve**.....21

Air Induction and Exhaust Systems.....23
- **Description**.....24
- **Air Flow**.....24

Fuel System.....25
- **Location**.....25
- **Description**.....26
  - **Negative Pressure (Vacuum)**.....26
  - **Fuel Supply Pump Pressure**.....26
  - **Supply Manifold**.....26
  - **Injection Control Pressure (ICP)**.....27
- **Fuel Injector Assembly**.....29
  - **Description**.....29
  - **Solenoid**.....30
  - **Poppet Valve**.....30
  - **Intensifier Piston and Plunger**.....30

Read all safety instructions in the "Safety Information" section of this manual before doing any procedures.
Follow all warnings, cautions, and notes.
©2006 International Truck and Engine Corporation

Nozzle Assembly.....30
Fuel Injector Operation.....30
Fill Cycle.....30
Injection.....30
End Of Injection - Drain Cycle.....31

©2006 International Truck and Engine Corporation

Component Location

Front View

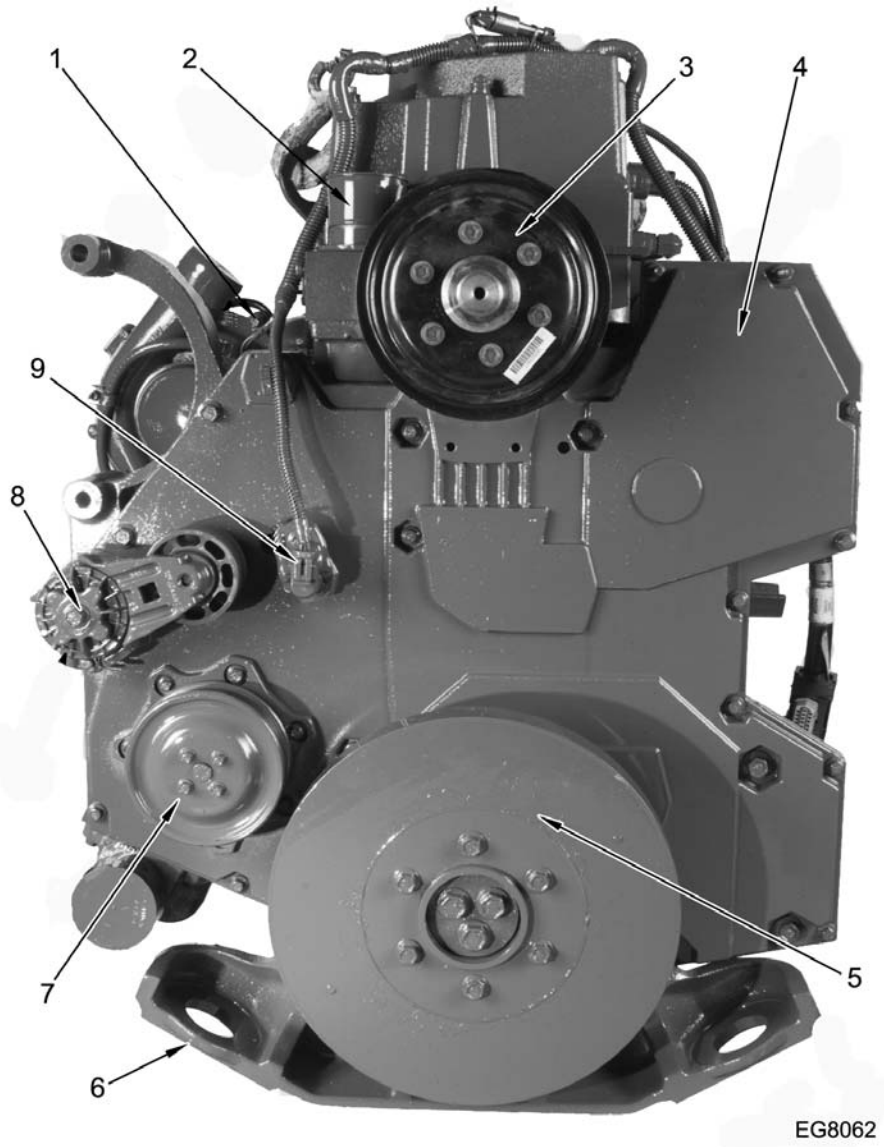

Figure 1 Front

1. Coolant Temperature Sensor
2. Thermostat
3. Fan Pulley
4. Front Cover
5. Vibration Damper
6. Front Engine Mounting Bracket
7. Water Pump Pulley
8. Auto Belt Tensioner
9. CMP Sensor

Read all safety instructions in the "Safety Information" section of this manual before doing any procedures.
Follow all warnings, cautions, and notes.
©2006 International Truck and Engine Corporation

Left View

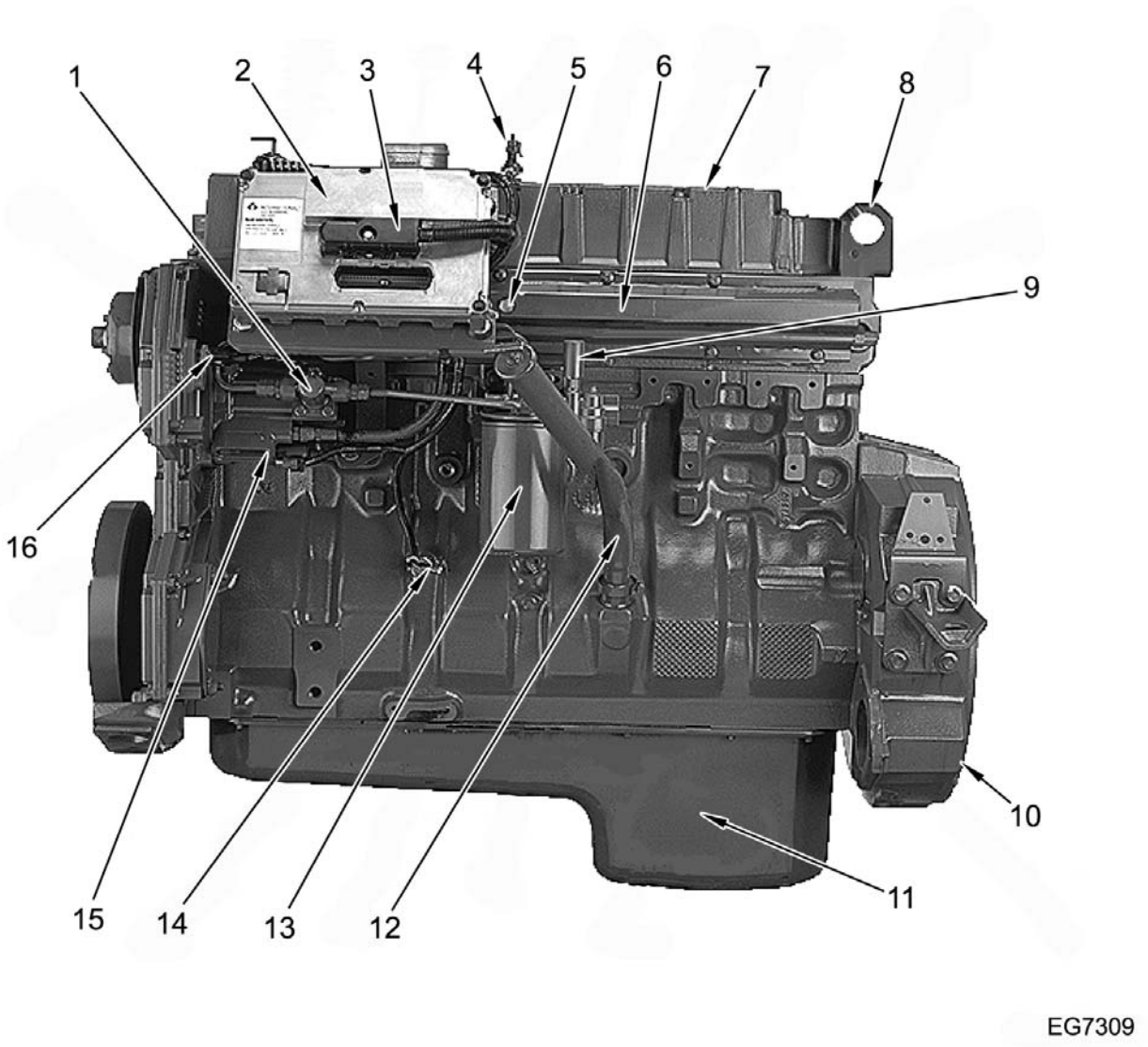

Figure 2 Left

1. Fuel Supply Pump
2. Electronic Control Module (ECM)
3. ECM Connector
4. Manifold Absolute Pressure Sensor (MAP)
5. Injection Control Pressure Sensor (ICP)
6. Supply Manifold
7. Valve Cover and Intake Manifold
8. Lifting Eye (Rear)
9. Hand Primer Pump
10. Flywheel Housing
11. Oil Pan
12. Oil Fill Tube and Oil Level Gauge
13. Fuel Filter
14. Engine Oil Pressure Sensor (EOP)
15. High-pressure Oil Pump
16. Oil Temperature Sensor

Read all safety instructions in the "Safety Information" section of this manual before doing any procedures.
Follow all warnings, cautions, and notes.
©2006 International Truck and Engine Corporation