WORKSHOP MANUAL

TB228

Serial No.122800004~

Book No. CE7E006

WETB228_E-XH



MINI EXCAVATOR

TAKEUCHI

FOREWORD

This manual, which is written for engineers who service the machine, describes procedures for disassembly and assembly, inspection and maintenance, and troubleshooting, as well as maintenance reference values and an outline of the specifications. Refer to this manual during daily work to improve your services. Note that the information is subject to change without notice due to design modifications made to the machine from time to time by the manufacturer.

Directional terms: front, rear, left, right

In this manual, the “front” refers to the end of the machine where the blade is mounted, while the “rear” refers to the other end where the travel motor is mounted. The “right” or “left” refers to the side viewed by a person sitting in the operator’s seat.

Machine serial number

The machine serial number is stamped on the identification plate. Be sure to include this number when sending a report or inquiry or when ordering parts.

Control of manual

Appoint a person in charge of keeping the manuals up to date in your company and inform us of the person’s name for our records. Any revisions or additions to this manual will be sent to the person.

Symbols used in this manual

The symbols used in this manual have the following meanings.

S/N Indicates the machine serial number.
☞ Means “Refer to the section quoted.”
kg Indicates the mass of the equipment or machine.
Means “Tighten to the torque specified here.”
Indicates the use of thread-locking compound.
Indicates the use of grease.

Manual structure

This manual consists of the following parts.

1. Safety
2. Service data
3. Function
4. Disassembly and assembly
5. Troubleshooting
6. Engine

Click on the image link below for the full version of the service manual



SAFETY ALERT SYMBOL



This symbol represents the safety alert. The message that follows the symbol contains important information regarding human safety.
Read and understand the message to avoid personal injury or death.

Safety label

Safety labels are used to alert operators or other people exposed to the risks of injury or damage. There are the following three types of labels.
Read the labels carefully as they are important for your safety.

⚠ DANGER

The word "DANGER" indicates an imminently hazardous situation which, if not avoided, is likely to result in serious injury or death.

⚠ WARNING

The word "WARNING" indicates a potentially hazardous situation which, if not avoided, could result in serious injury or death.

⚠ CAUTION

The word "CAUTION" indicates a potentially hazardous situation which, if not avoided, may result in minor or moderate injury.

IMPORTANT: The word "IMPORTANT" is used to alert operators and maintenance personnel about situations which could result in damage to the machine and its components.

This manual is intended for trained and qualified personnel only. Warnings or cautions described in this manual do not necessarily cover all safety measures. It is also impossible to cover all hazards and risks which may be associated with the maintenance of the machine in every environment. For maintenance work, each person must take adequate safety precautions against possible hazards in the respective working environment.

SAFETY PRECAUTIONS

Observe all safety rules

- Operation, inspection and maintenance of this machine must be performed only by a trained and qualified person.
- All rules, regulations, precautions and safety procedures must be understood and followed when performing operation, inspection and maintenance of this machine.
- Do not perform any operation, inspection or maintenance of this machine when under the influence of alcohol, drugs, medication, fatigue or insufficient sleep.

Wear safe clothing and protective gear

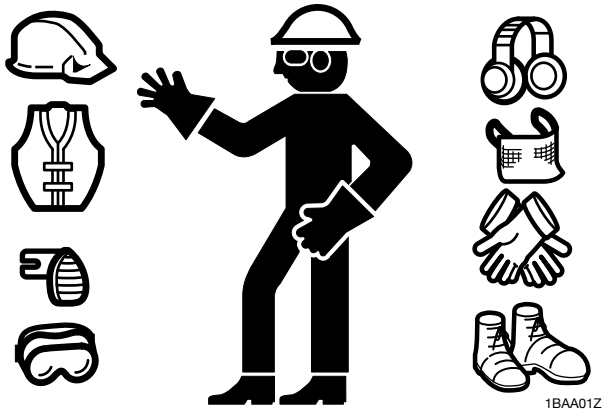

1BAA01Z

- Do not wear loose clothing or any accessory that can catch on the controls or the moving parts of the machine.
- Do not wear clothing stained with oil or grease that can easily catch fire.
- Wear protective gear such as helmet, safety shoes, protective goggles, respirator, gloves and earmuffs, as appropriate, depending on the work involved. Especially make sure to wear protective eye-wear and mask when working with a grinding/polishing/sanding machine, hammer or compressed air, as metal fragments or other objects could scatter in such an environment.
- Wear hearing protectors when operating the machine. Loud and prolonged noise can damage or destroy your hearing.

Install an extinguisher and a first aid kit

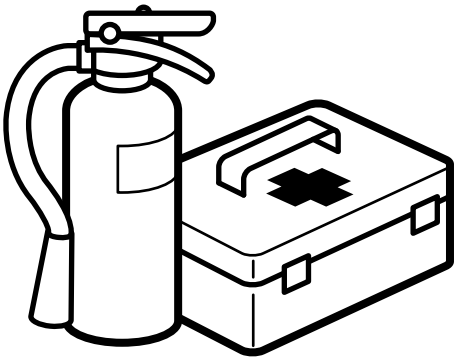

1BAA02Z

- Install an extinguisher to fight a fire, and learn how to use it.
- Prepare a first aid kit and keep it at a designated place.
- Decide on the procedures to be used in case of fire or other hazards.
- Decide on and take note of the contact(s) in case of emergency.

Place a “Do not operate” alert sign

Serious injury or death may result if an unauthorized person starts the engine or touches the controls during inspection or maintenance.

- Before performing maintenance, stop the engine, remove the key and store it in a safe place.
- Prominently display a “Do not operate” alert sign on places such as the starter switch and the control lever. Place another sign outside of the machine as necessary.

Use the correct tools

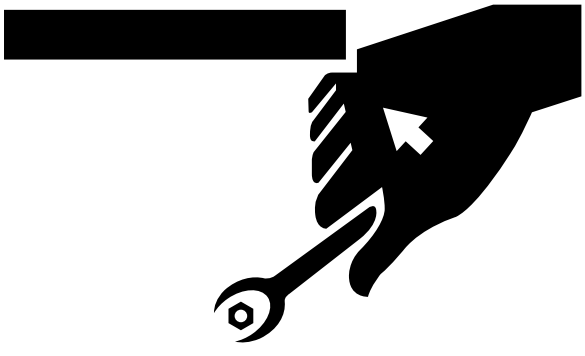

1BAA03Z

Do not use damaged or weakened tools or tools designed for other purposes. Use only the correct tools for the work involved.

Regularly replace the safety-critical parts

- Regularly replace fuel hoses to prevent a fire hazard. Hoses wear out over time, even if they do not show any symptom of wear.
- Regardless of the replacement schedule, replace immediately if a symptom of wear is found.

Explosionproof lighting



1BAA04Z

To prevent an ignition or explosion, use explosion-proof lights when inspecting fuel, oil, coolant or battery fluid.

Prohibit access by unauthorized persons

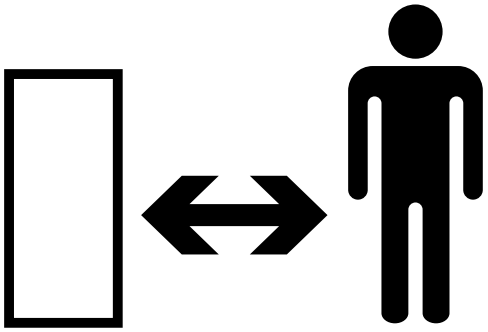

1BAA05Z

Do not allow unauthorized personnel in the work area while working.
Take particular care that no unauthorized person is present when grinding, welding or using a hammer.

Prepare the work area

- Select a level and firm ground on which to perform maintenance work. Make sure that the work area is light enough and well ventilated.
- Straighten any obstacle or dangerous object, remove any spill of oil or grease and clean the work area.

When the canopy is tilted up

- If the canopy is raised or lowered while the engine is moving, the machine may accidentally start moving, resulting in severe injury to the maintenance personnel. Make sure that the working equipment has been lowered to the ground and the engine has been turned off before raising/lowering the canopy.
- When the canopy is tilted up, firmly secure the canopy with a stopper to prevent it from falling.

Keep the machine clean

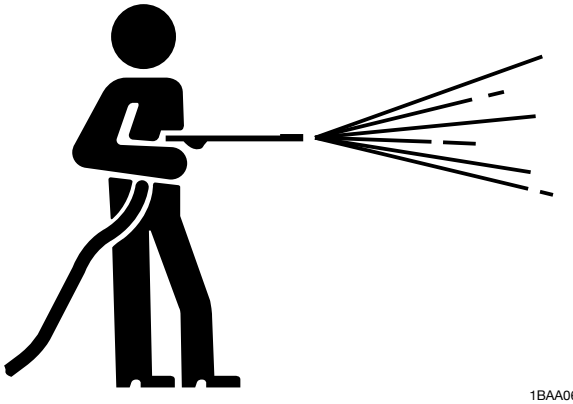

1BAA06Z

- Clean the machine before performing maintenance and try to keep it clean.
- Before washing, cover the electrical parts with vinyl to prevent water from entering, as this could cause a short-circuit or malfunction. Do not use water or steam to wash the battery, sensors, connectors or the operator's seat area.

Stop the engine before performing maintenance

Make sure the engine is stopped before starting inspection or maintenance. If maintenance must be performed with the engine running, always work as a 2-person team, communicating with each other.

- One of them must sit at the operator's seat and stop the engine whenever necessary. He/she must take care not to touch the lever or pedal unless necessary.
- The one who performs maintenance must make sure to keep his/her body or clothing away from the moving part of the machine.

Keep clear of the moving fan and belt

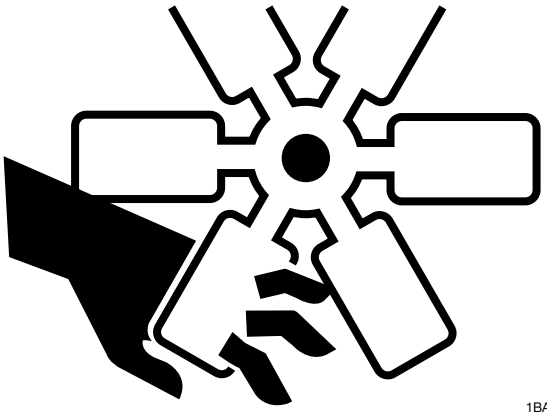

1BAA07Z

- Any object that can be easily caught in moving parts must be kept away.
- If a hand or tool becomes trapped in the fan or fan belt, you could lose your finger. Do not touch the fan or belt while they are moving.

When working under the machine



1BAA08Z

- Before performing maintenance or repairs under the machine, set all movable equipment against the ground or in the lowermost position.
- Place chocks under the crawler tracks to secure the machine.
- If it is unavoidably necessary to work under the raised machine or working equipment, be sure to firmly support it by using an arm stopper, wooden block, stand or safety brace. Never go under the raised machine or working equipment without such protection measures.

When working on the machine

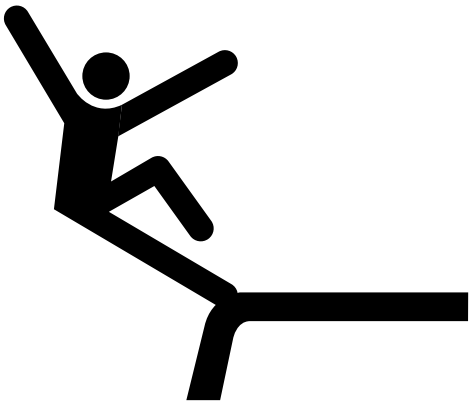

1BAA09Z

- To prevent slipping/falling from machine, clear the footing and observe the following:
  a. Do not spill oil or grease on the machine.
  b. Keep the machine tidy and clean.
  c. Be careful when walking around the machine.
- Never jump down from the machine. Climb up/down the ladder (steps) holding the handrail to support your weight in a three point secure stance (hand and feet).
- Wear protective gear according to the work involved.

Securing the working equipment

When replacing/repairing the bucket teeth or side cutter, secure the relevant equipment to prevent any accidental movement.

Secure the engine hood and guard when they are open

Firmly secure the machine when the engine hood or guard is left open. Do not keep the hood or guard open on a windy day or if the machine is parked on a slope.

Place heavy components in a stable position



1BAA10Z

When it is necessary to temporally place a heavy component, such as the hoe attachment, on the ground during removal or installation, be sure to place it in a stable position.

Caution when filling with fuel or oil


1BAA11Z

- Keep away from heat, sparks and flame while filling with fuel or oil.
- Never remove the fuel cap or try to fuel when the engine is running or still hot.
- Maintain control of the fuel filler nozzle when filling the tank.
- Refill with fuel or oil outdoors or in a well ventilated place, with the engine turned off.
- Clean up spilled fuel or oil immediately.
- Do not overfill the tank.
- Firmly tighten the fuel cap or oil cap. If the fuel cap is lost, replace it only with the original manufacturer's approved cap. Use of a non-approved cap without proper venting may result in pressurization of the tank.
- Never use fuel for cleaning.
- Use the correct grade of fuel for the operating season.

Handling of hoses

Oil leak or fuel leak can cause a fire.

- Do not twist, bend or hit the hoses.
- Never use twisted, bent or cracked pipes, tubes or hoses; otherwise, they may burst.
- Retighten loose connections.

Be careful with hot and pressurized components

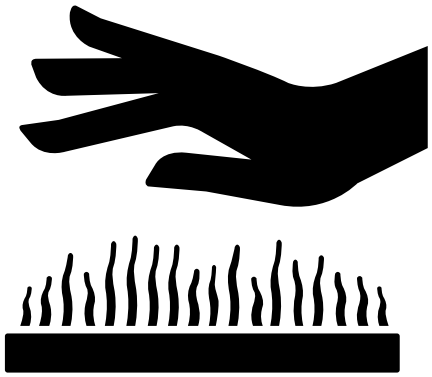
1BAA12Z

Before performing inspection and maintenance, stop the engine and allow the machine to cool down.

- The engine, muffler, radiator, hydraulic lines, sliding parts and many other parts of the machine are hot immediately after the engine is stopped. Wait until it cools before making any inspection or adjustments.
- The engine coolant, hydraulic oil and other oils are also hot and under high pressure. Touching these liquids will cause burns.

Handling of radiator

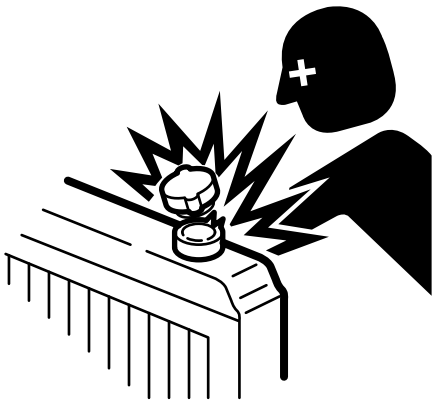
1BAA13Z

Do not remove the radiator cap when the coolant is hot. Wait until it cools down, and then remove the radiator cap by loosening it slowly to release the internal pressure.

Be careful with oils under pressure

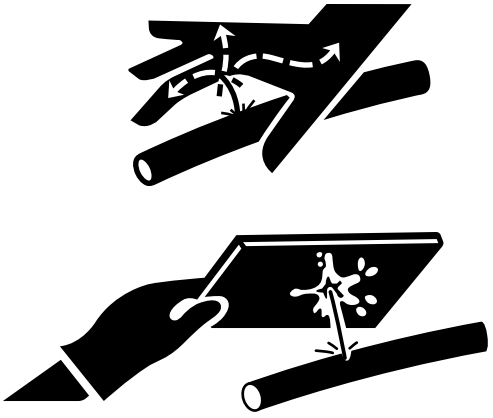

1BAA14Z

Pressure is maintained in the hydraulic circuit long after the engine has been shut down.

- Do not fill with, dispose of fuel/oil, or perform the inspection and maintenance until the internal pressure is completely released.
- The hydraulic oil escaping from a small hole can be hazardous if contacted. It is under high enough pressure to penetrate the skin or eyes and cause serious injury. If leak is suspected, protect your eyes and skin by wearing protective glasses and thick gloves to search for a leak. Also use a paperboard or plywood to keep your skin from oil spurting. If oil penetrates the skin, it must be surgically removed within a few hours by a doctor familiar with this type of injury.

Release internal pressure before working on the hydraulic system

Oil may spurt out if caps or filters are removed or pipes are disconnected before releasing the pressure in the hydraulic system.

- Gradually loosen the vent plug to release the internal pressure of the hydraulic oil tank.
- Move all the control levers and pedals several times in all directions to release the pressure from the circuit of the working equipment (for link type controls).
- When removing plugs or screws, or when disconnecting hoses, stand to the side and loosen them slowly to gradually release the internal pressure before removing.

Be careful with grease under pressure



1BAA15Z

In the track adjuster, the grease has been injected under high pressure. If the tension is adjusted without following the prescribed procedure, the grease discharge valve may fly off, resulting in injury.

- Loosen the grease discharge valve slowly.
- Do not put your face, arms, legs or body in front of the grease discharge valve.

Handling of the accumulator



1BAA16Z

Be sure to handle the high-pressure nitrogen gas enclosed in the accumulator with care according to procedure. If handled incorrectly, it could explode and cause serious injury. Strictly observe the following precautions:

- Do not disassemble.
- Do not allow flame near it or throw it into a fire.
- Do not drill, weld or fuse.
- Do not subject it to physical shock such as hitting, rolling or dropping.
- Before disposing of the unit, the sealed gas must be drained. Contact your sales or service dealer for help with this.

Disconnect the battery

Disconnect the wiring from the both terminals (+ and -) on the battery before working on the electrical system or doing electric welding. Otherwise, short-circuit and explosion of the battery can result.

Use caution when handling batteries



1BAA17Z

- Batteries contain sulfuric acid which will damage eyes or skin if contacted.
  - If eye contact occurs, flush immediately with clean water and get prompt medical attention.
  - If accidentally swallowed, drink large quantities of water or milk and call a physician immediately.
  - If acid contacts skin or clothing, wash off immediately with a lot of water.
- Wear protective glasses and gloves when working with batteries.
- Batteries generate flammable hydrogen gas which may explode. Keep away from flame and sparks.
- Do not use or charge the battery when the electrolyte level is lower than the lower limit: otherwise, it could cause an explosion.
- Be sure to stop the engine by turning off the starter switch before inspecting or handling the battery.
- Be careful not to let metal tools (or any metal objects) such as a hammer or spanner come into contact with the battery terminals.
- When disconnecting the battery wiring, always disconnect it from the earth side (-). When connecting, connect the earth side last.
- Loose battery terminals may result in sparks. Be sure to fasten terminals tightly.
- Make sure the battery caps are tightened securely.
- Do not charge a battery or jump-start the engine if the battery is frozen; otherwise it may explode.
  Warm the frozen battery to 15°C (60°F) before use.

Have a service agent repair welding cracks or other damage

Ask a service agent to make any repairs that require welding. If the agent is unavailable, make sure the welding is done by a qualified person in a properly equipped workplace.

Checks after maintenance

- Gradually raise the engine speed from low idle to maximum and check that no oil or water is leaking from the parts serviced.
- Move the controls and check that the machine is operating properly.

Disposing of wastes

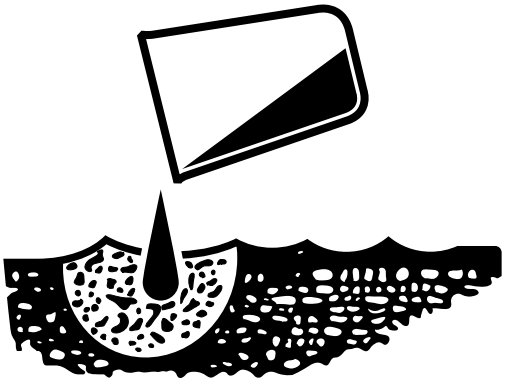

1BAA18Z

- Always collect oil that is drained from the machine in containers. Improperly disposed waste oil can cause environmental harm.
- Follow appropriate laws and regulations when disposing of harmful objects such as oil, fuel, coolant, solvent, filters and batteries.

CAUTIONS WHEN WORKING

When disassembling or assembling

- Clean the machine before disassembly.
- Check the following items and record the results:
  a. Model, machine serial number, hour meter.
  b. Reason for repair, repair history.
  c. Are the filters dirty?
  d. The conditions of the fuel and oil.
  e. Any damage or looseness to any part?
- Where necessary, draw alignment indicators to avoid assembly errors. To avoid misconnection, place indicators such as reference tags on pipes.
- Clean all disassembled parts and new parts, arrange them neatly, and place indicators as necessary.
- Be sure to replace all seals and cotter pins with new ones.
- Keep those parts that should not come in contact with water or oil away from those with oil on the surface.
- When installing bearings, bushings and oil seals, a press tool should be used. If a hammer is used, use a cushioning material to avoid damage.
- Wipe all joining surfaces clean until there is no dirt or dust adhering to them.
- Wrap the thread tight with seal tape starting 1 or 2 threads away from the thread end. The tape should be overlapped by about 10 mm.

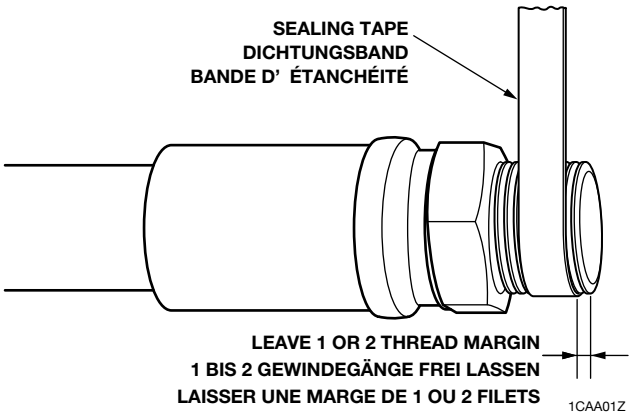

When removing/installing the hydraulic unit

- Make sure that the temperature of the hydraulic oil has dropped and is cool enough to work with.
- To prevent the hydraulic oil from escaping under pressure, release the residual pressure in the piping.
- Be sure to install caps or plugs on all openings in the hydraulic unit to prevent dirt from getting into the unit through them.

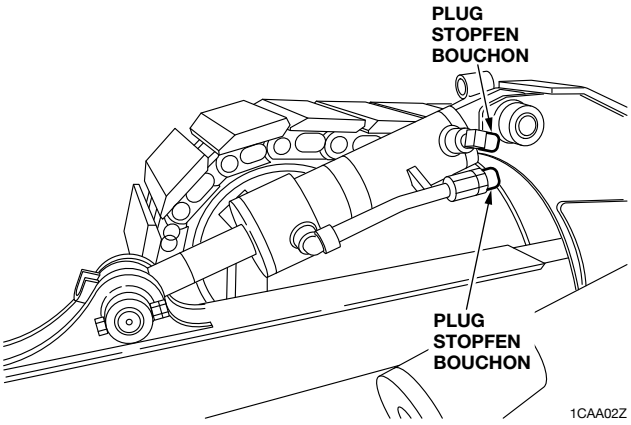

- The hydraulic oil adhering to the unit is often mistaken for an oil leak, so wipe off the unit thoroughly.
- Be sure that no damage is caused to the plating on the rod in the hydraulic cylinder.
- Removal and installation of the hydraulic cylinder should be done with the rod fully retracted.
- Be sure to bleed the air after installing the hydraulic cylinder. (☞ "4. Disassembly and assembly: Cylinder")
- Always bleed the air when hydraulic oil is changed or a hydraulic device is replaced.(☞ "4. Disassembly and assembly: Drive system")

When connecting/disconnecting the hoses or pipes

- When hydraulic hoses or pipes are connected, tighten them once to the prescribed torque, then loosen them slightly and retighten them to the prescribed torque.
  a. Tighten the fittings after the installation surfaces fit snugly together.
  b. The above procedures do not apply to fittings with seal tape.
- Use two spanners, one to tighten/loosen and the other to secure the mating hose/pipe to ensure that the hose is not twisted.

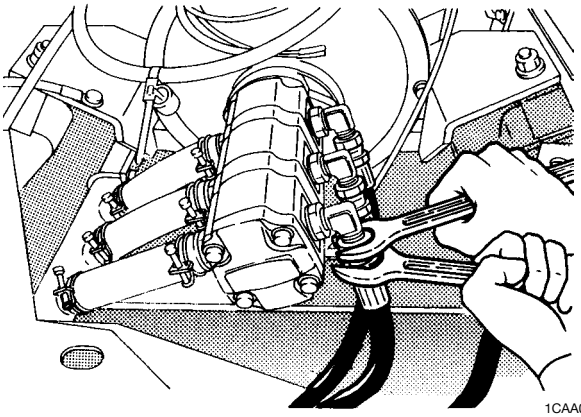
1CAA03Z

- After connecting the hydraulic hoses or pipes, apply the maximum working pressure five or six times to check for leakage.
- If high pressure, vibration or shock is applied to a twisted hose, oil leak, hose breakage or damage to the hose fitting can result.
- Be sure that the hydraulic hoses are not contacting sharp objects or each other. This could cause surface flaws on the hoses, resulting in breakage.

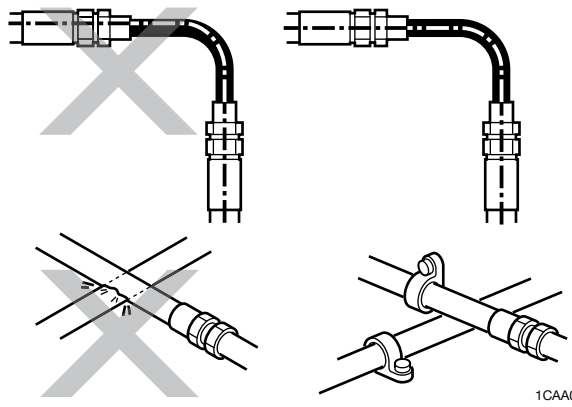
1CAA04Z

Handling of seals

- Clean the grooves for O-rings and remove any burrs.

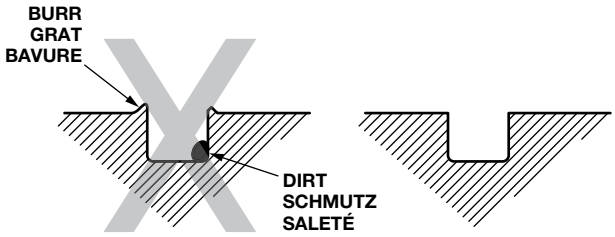

1CAA05Z

- Be careful not to twist the O-rings. If twisted, remove it with your fingertips.
- When inserting, be careful not to damage the seal.
- Handling of the floating seal
  a. After removal, wipe all oil off the O-ring and housing of the floating seal.
  b. When assembling, apply a thin coating of gear oil to the contact surface of the housing,
  c. After assembly, turn the seal two or three times to get it to fit snugly.
- Apply grease to the lip of the oil seal.
  a. This is to prevent wear from occurring upon first start up after assembly.

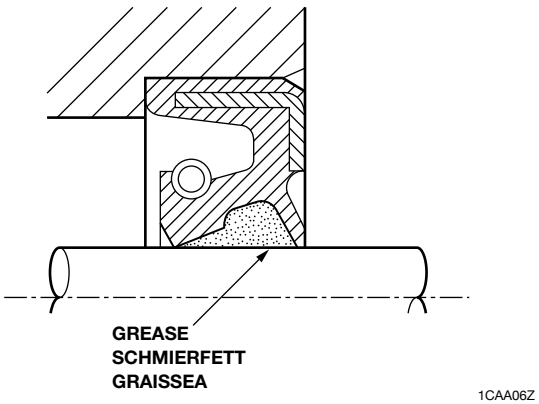

1CAA06Z